LIV - SCHUHSCHRANK 3T

00030003/03
00030003/04
00030003/23
00030003/53
00030003/63
00030003/73

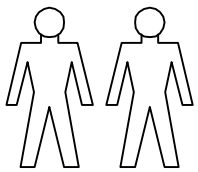

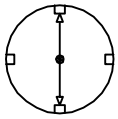

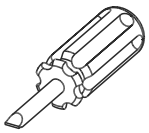

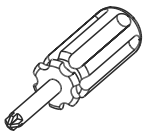

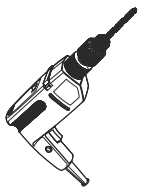

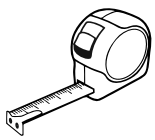

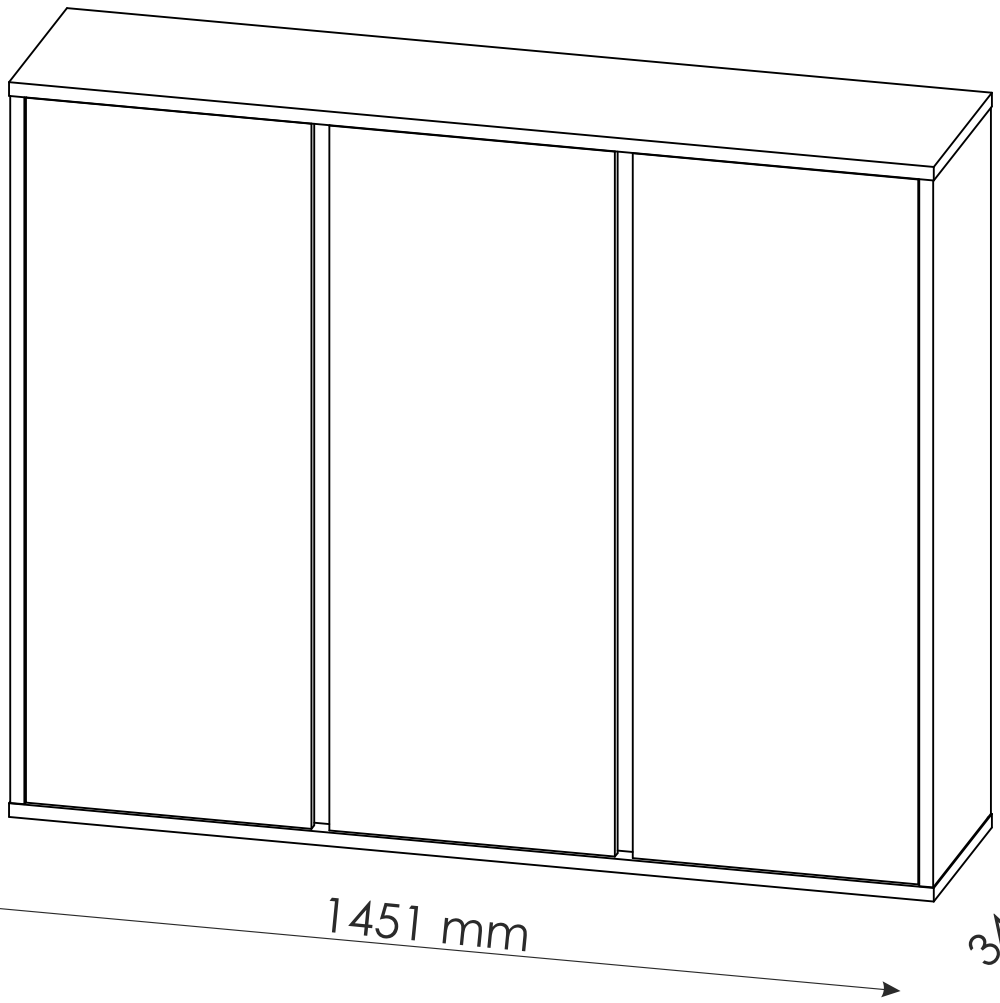

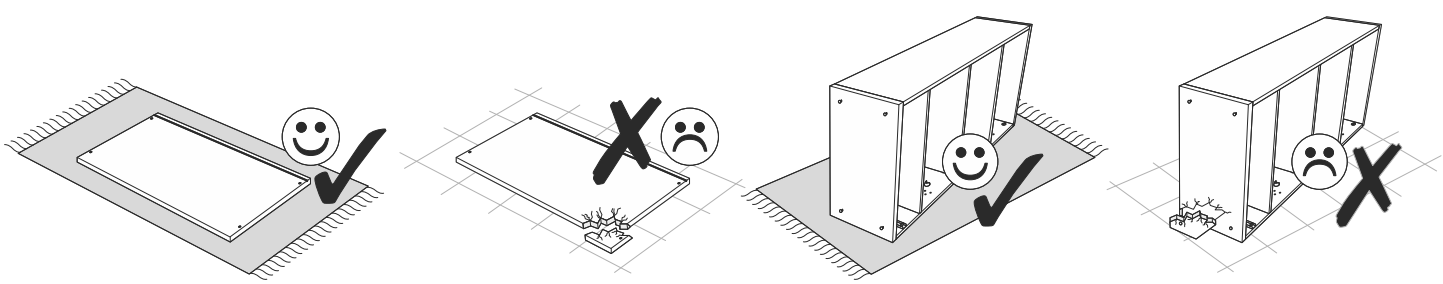

B2 f 7 x 70 mm  **x8**	C0  **x8**	C2  **x16**
D0 3 x 15 mm  **x36**	D10 4 x 16 mm 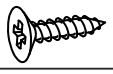 **x18**	D12 4 x 25 mm  **x32**
D21 5 x 13 mm  **x2**	E0 5 x 50 mm 8 x 50 mm 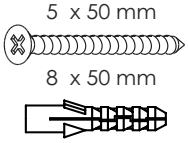 **x2**	J4  **x6**
J6 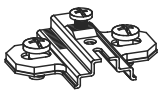 **x9**	J8 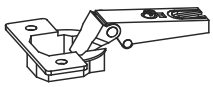 **x3**	K 4mm 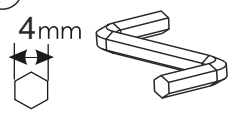 **x1**
M1  **x36**	P0 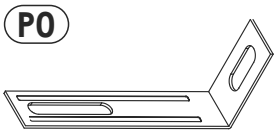 **x2**	Q3 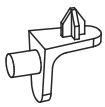 **x72**
T5 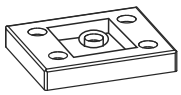 **x8**	U0  **x6**	* **LOGO...** **x1**

* 00030003/03
00030003/04
00030003/23
00030003/73

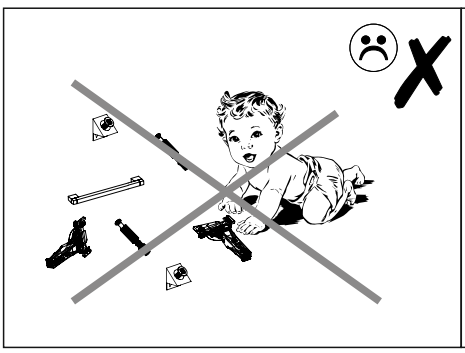



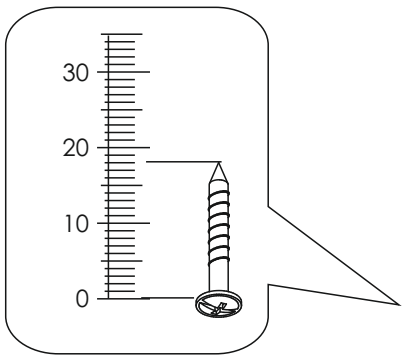

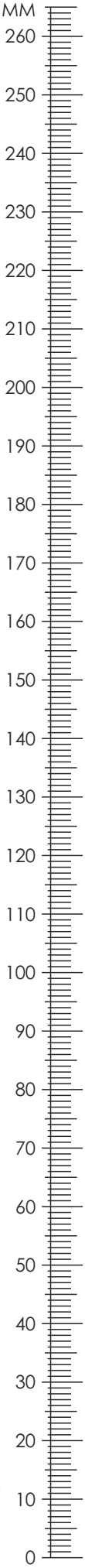

1	1141	338	22	x1	2/3
2	1141	338	22	x1	2/3
3	1451	340	22	x1	2/3
4	1451	340	22	x1	2/3
5	1141	319	16	x1	3/3
6	1141	287	16	x1	3/3
7	1137	448	16	x2	1/3
8	1137	448	16	x1	1/3
9	478	267	16	x12	3/3
10	415	267	16	x6	1/3
11	1151	487	3	x2	1/3
12	1151	423	3	x1	1/3
13	1141	59	32	x1	3/3
14	1141	90	32	x1	3/3
					2/3

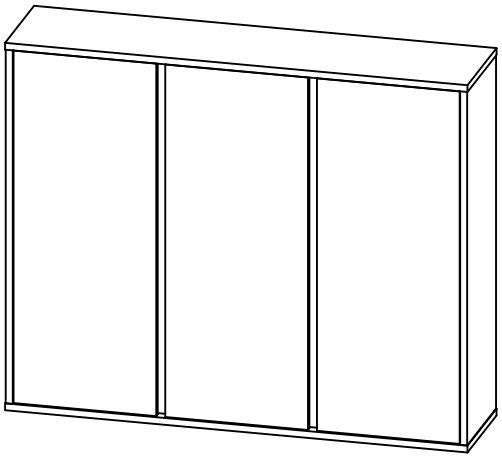

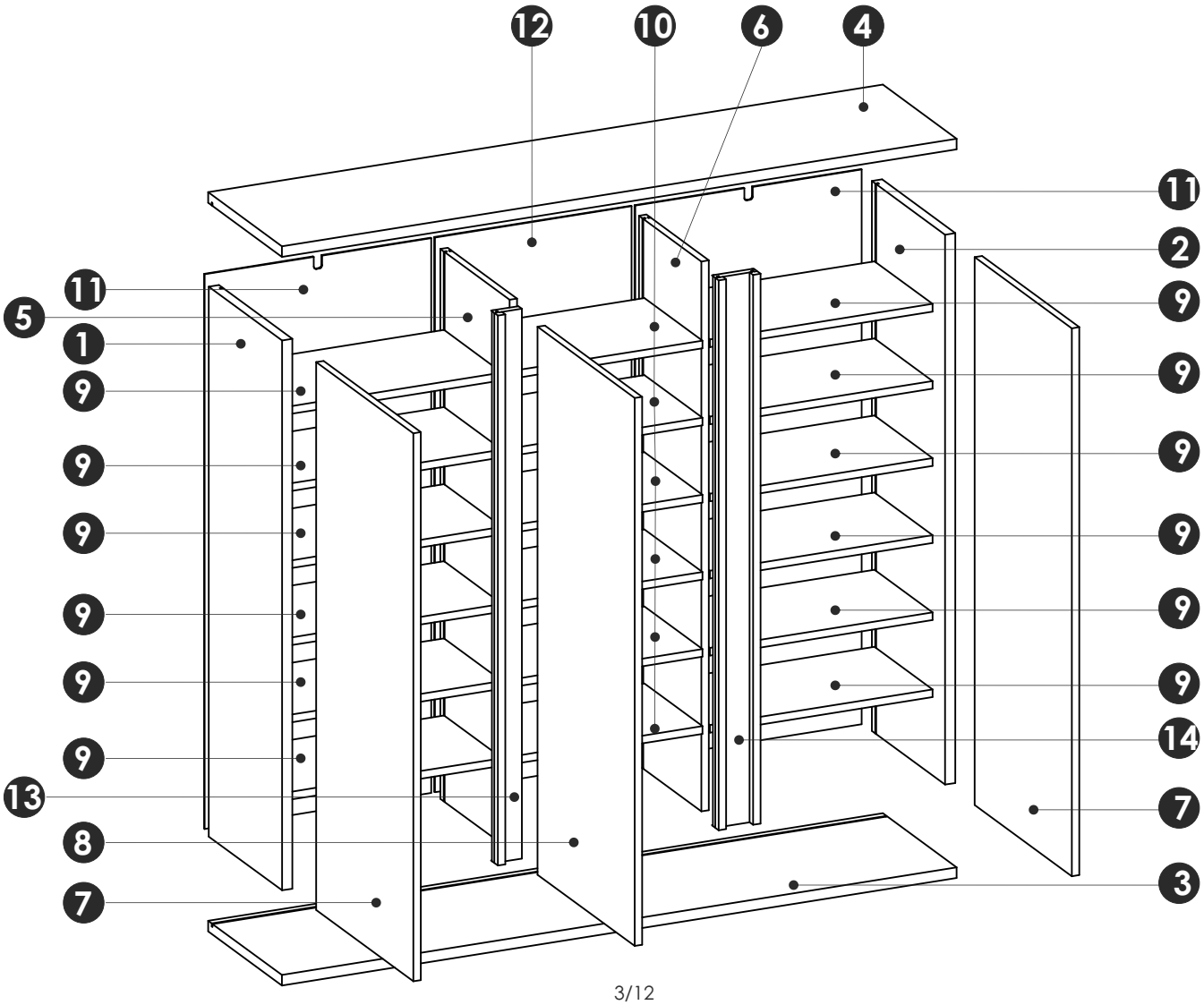

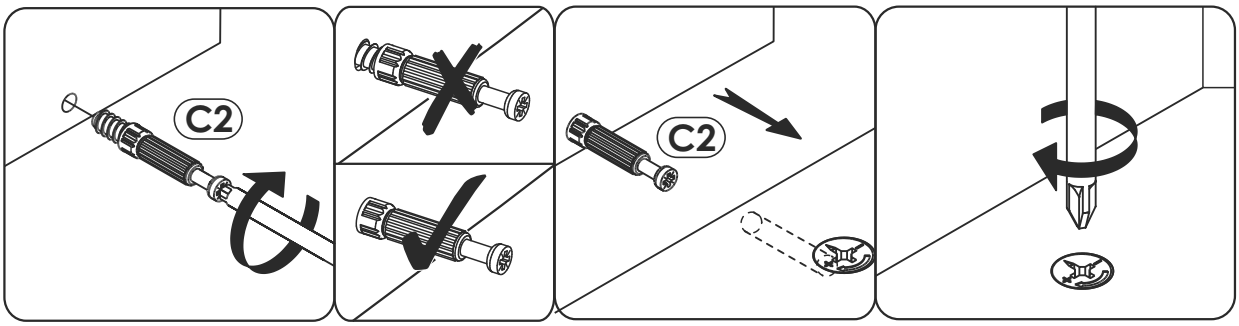

1

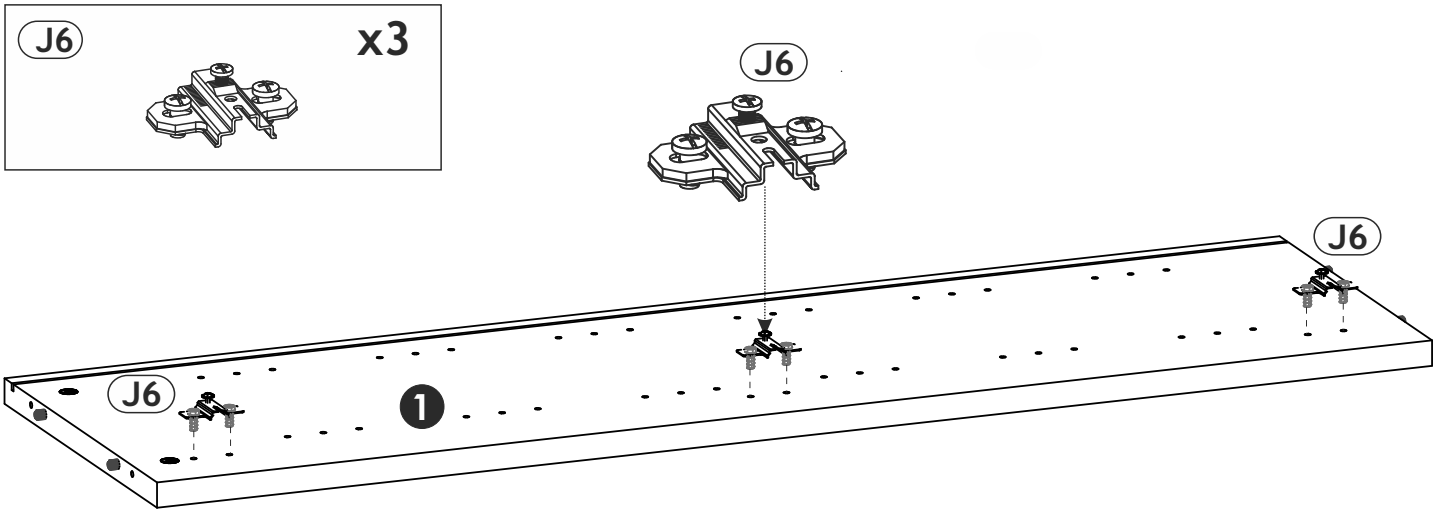

2

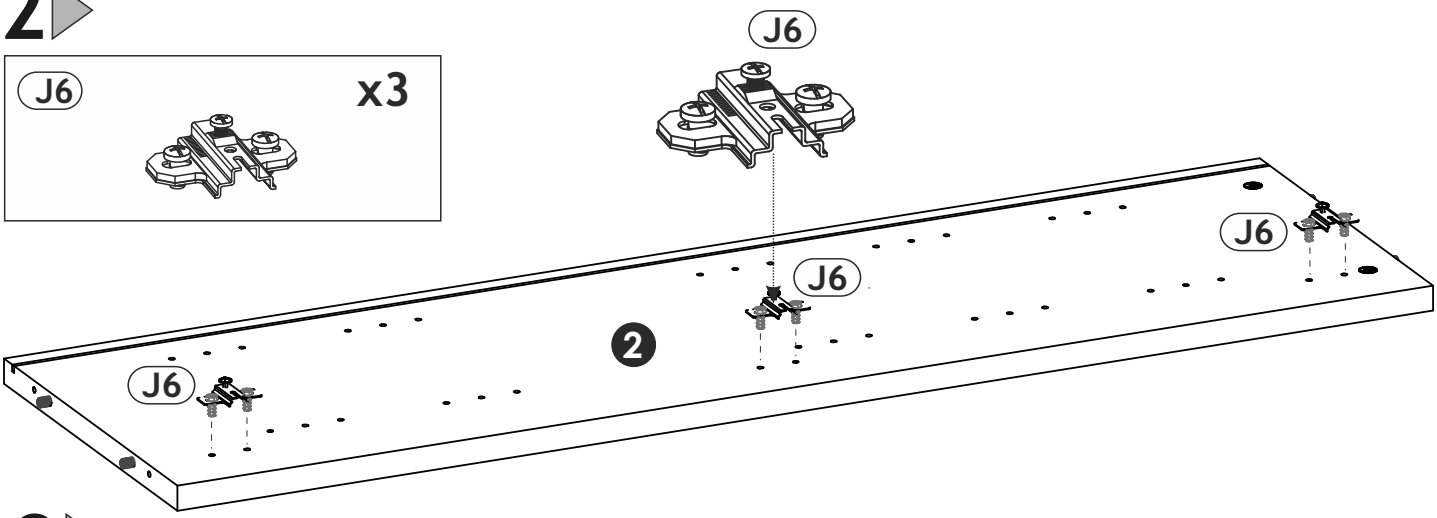

3

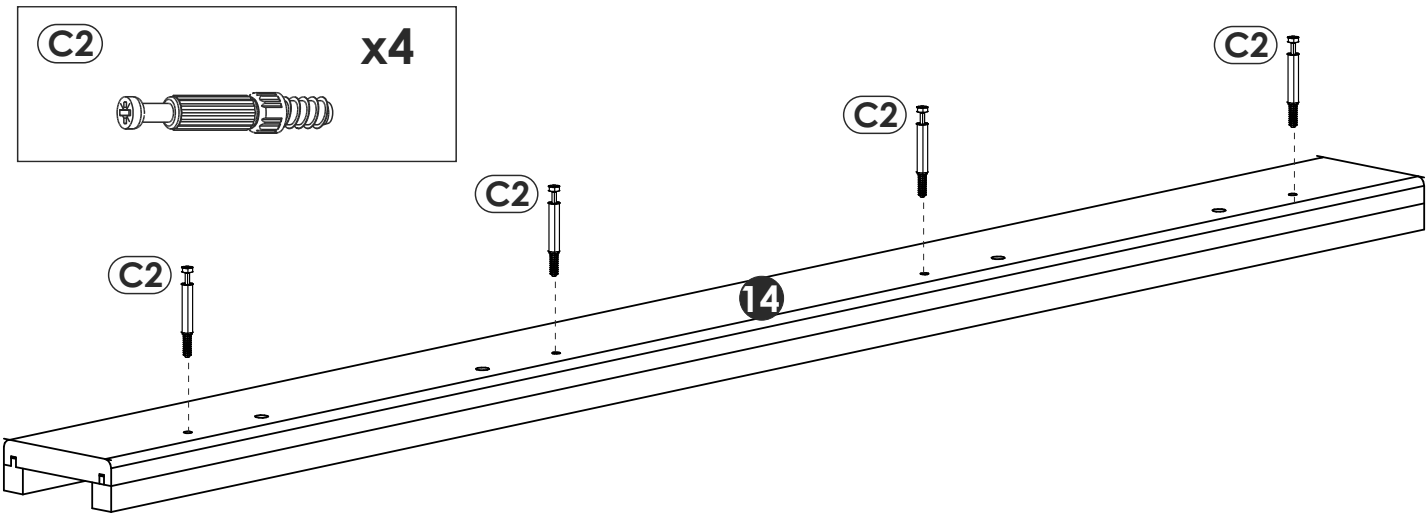

4

J6 x3	C2 x4

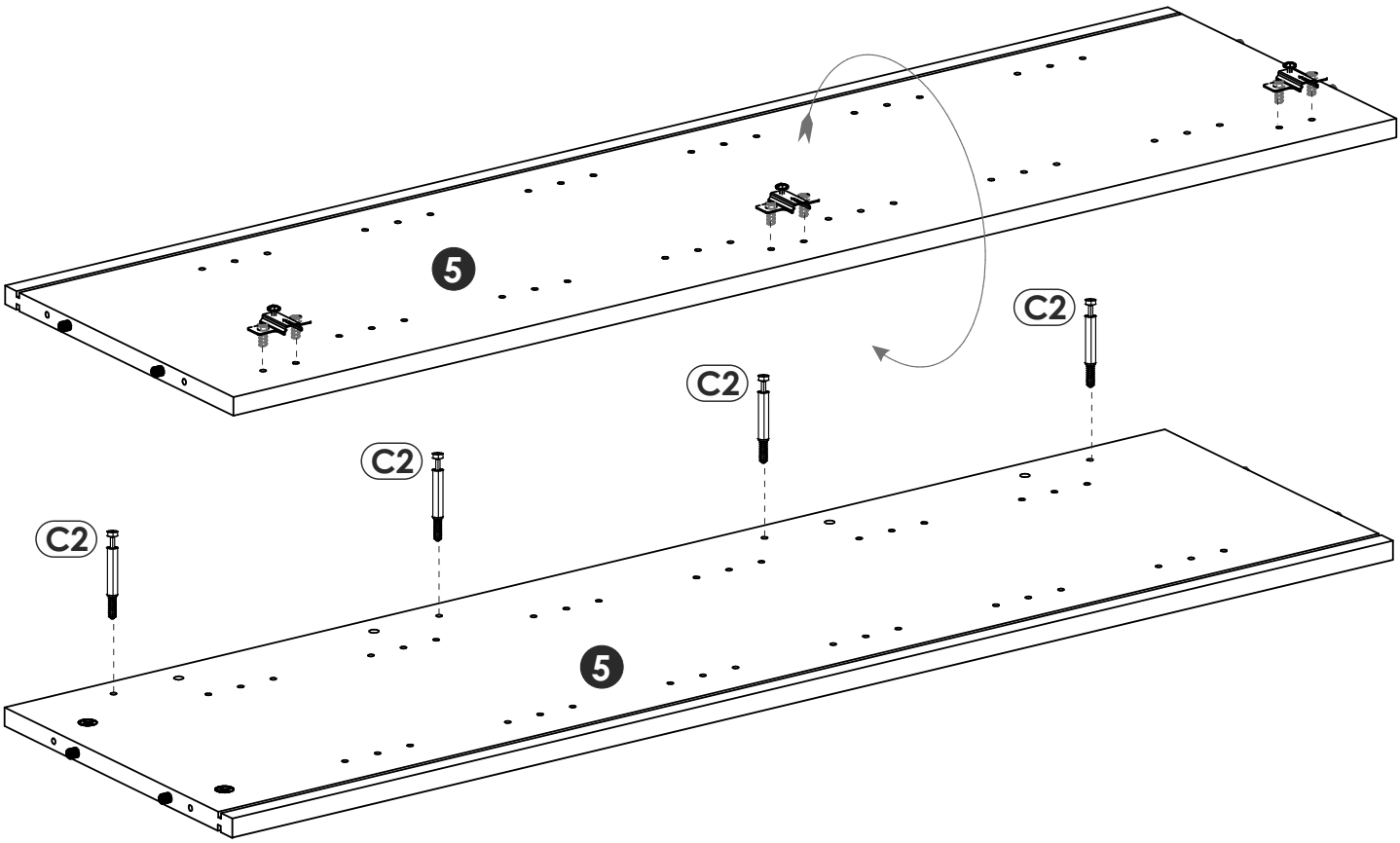

5

C2 x8	D21 x2 5 x 13 mm
P0 x2	

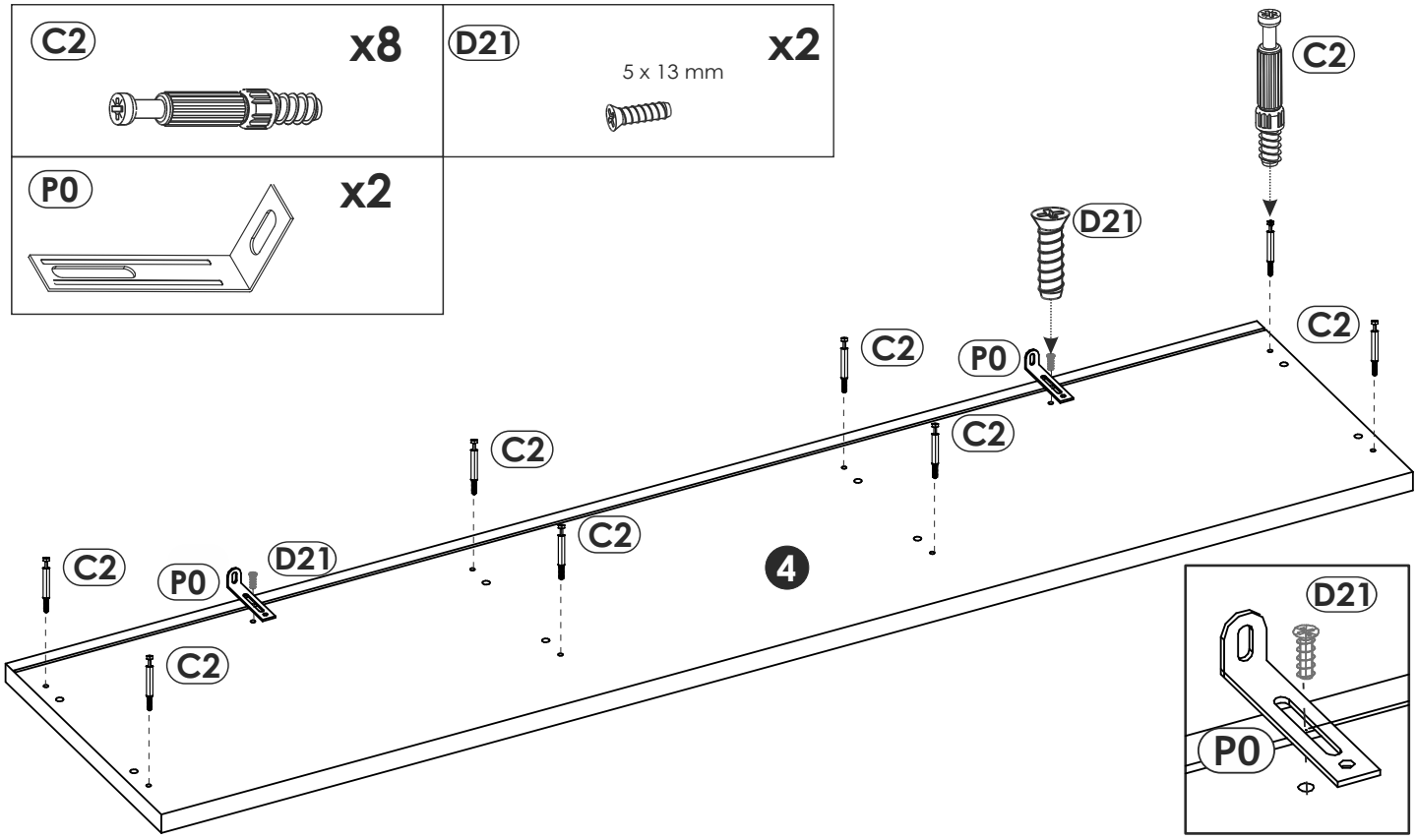

6

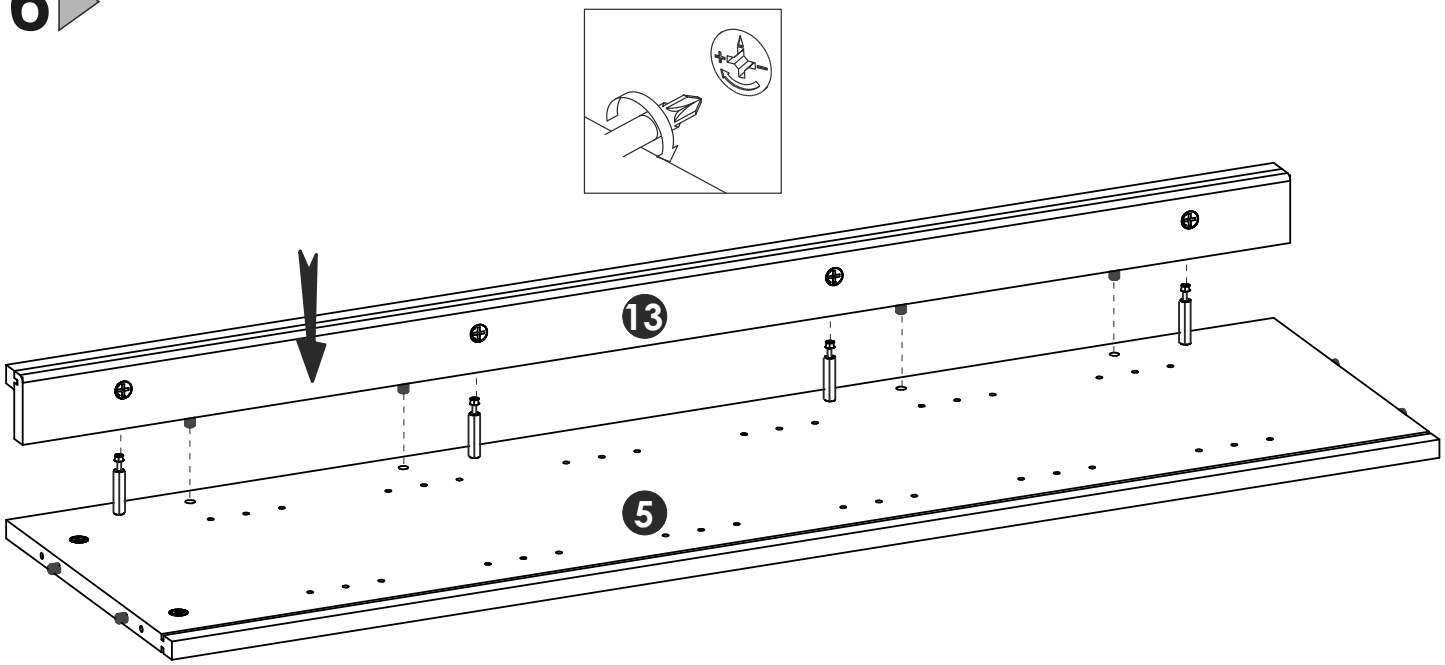

7

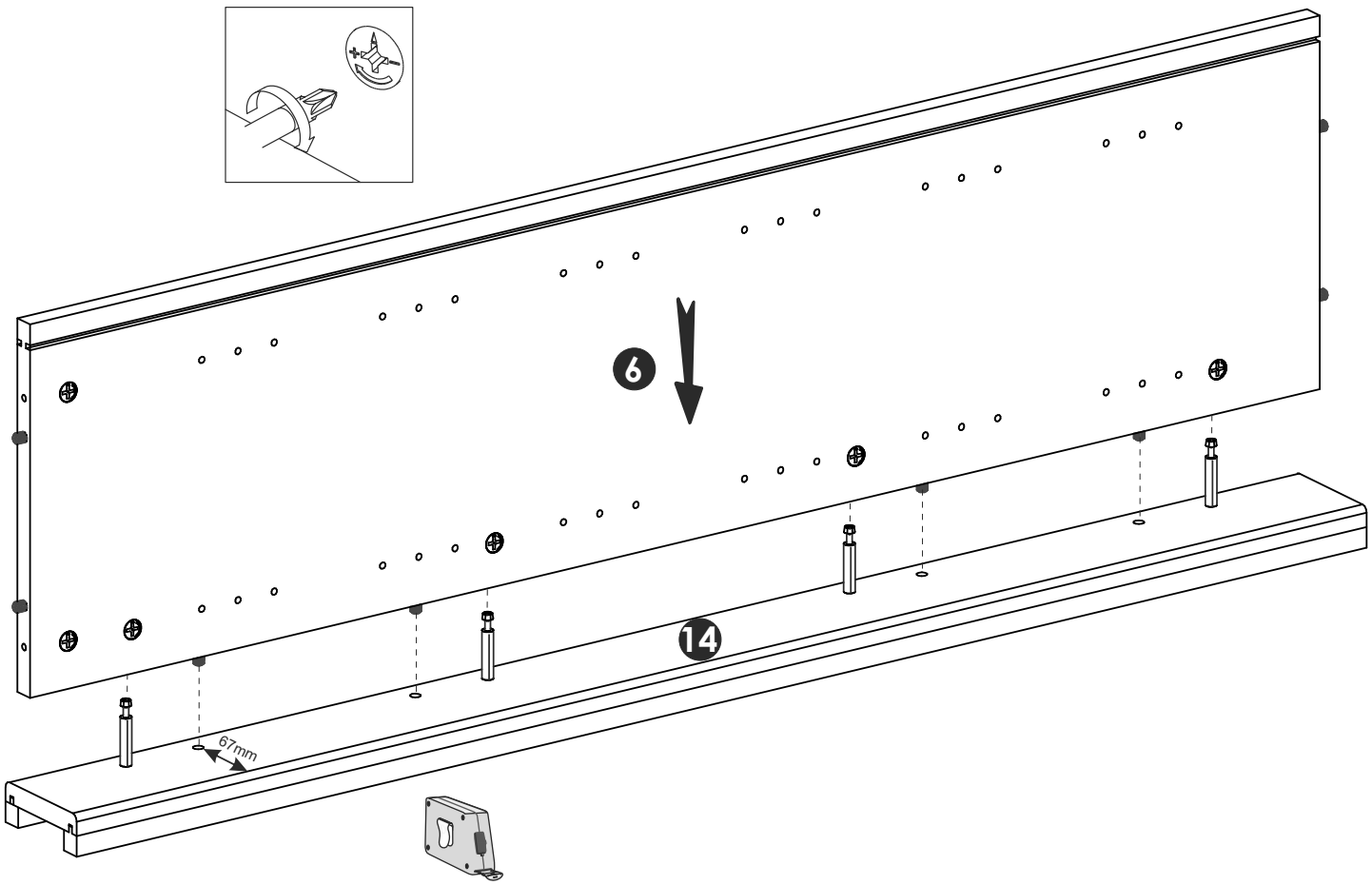

8

B2 f 7 x 70 mm x8

K 4mm x1

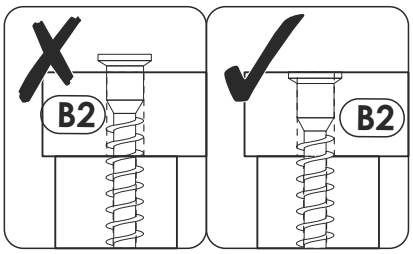

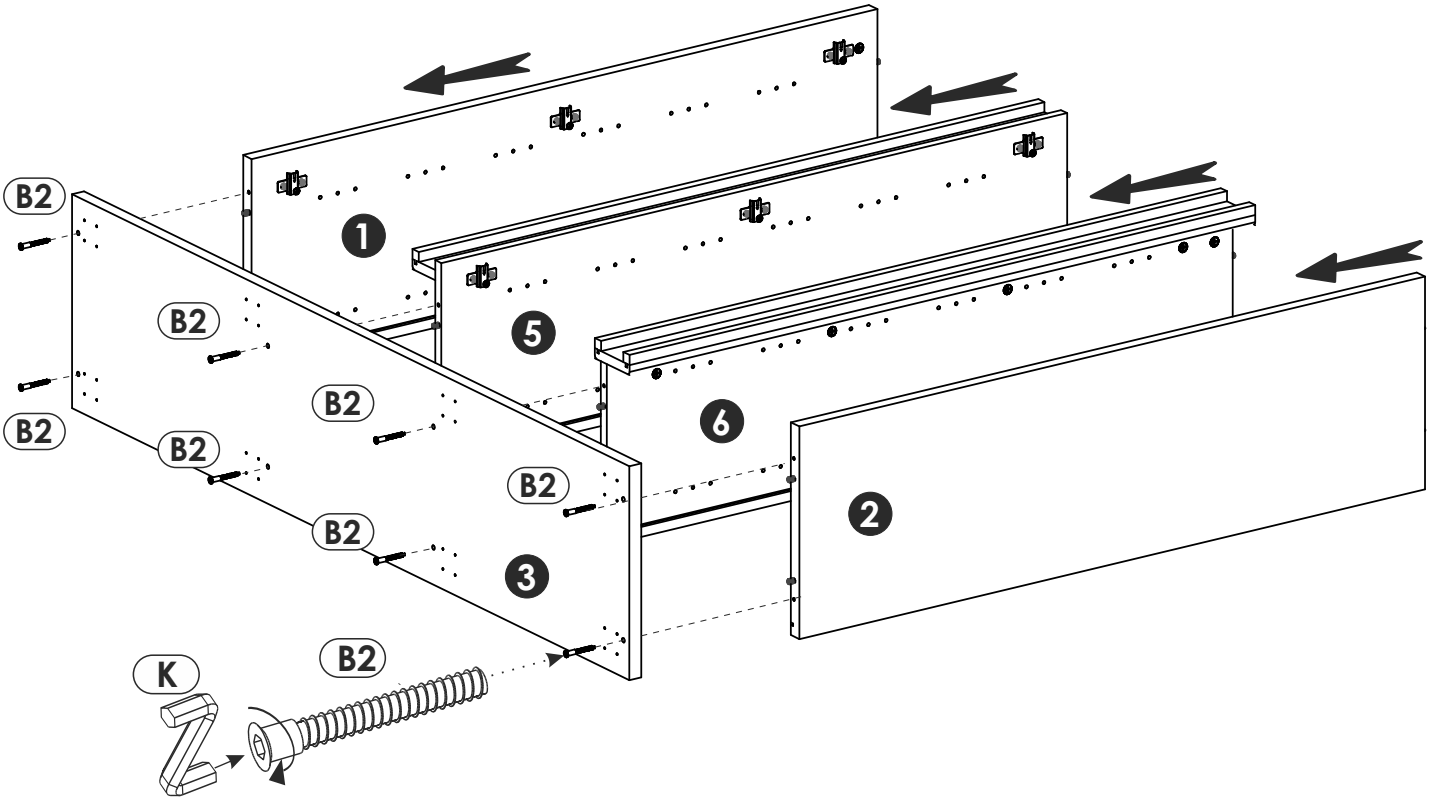

9

D12 4 x 25 mm x32

T5 x8

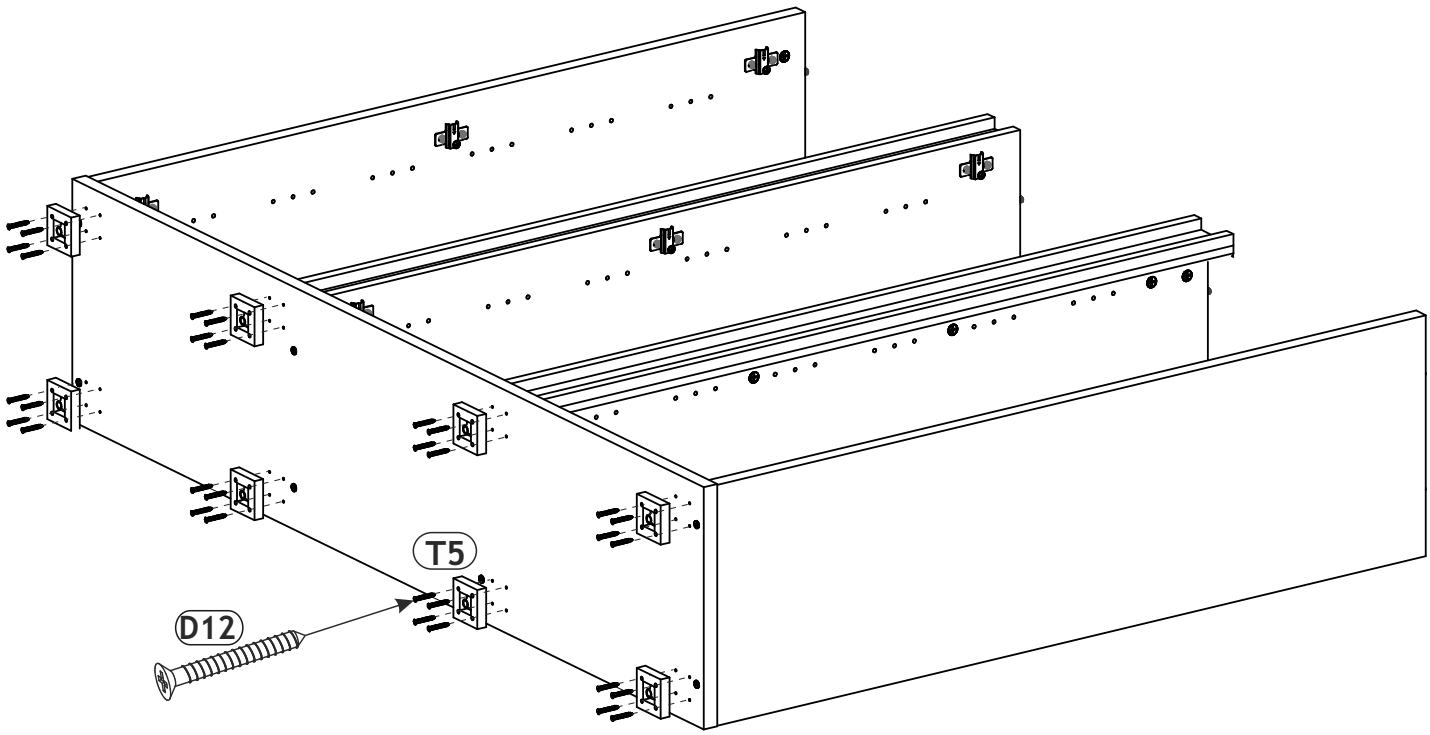

10

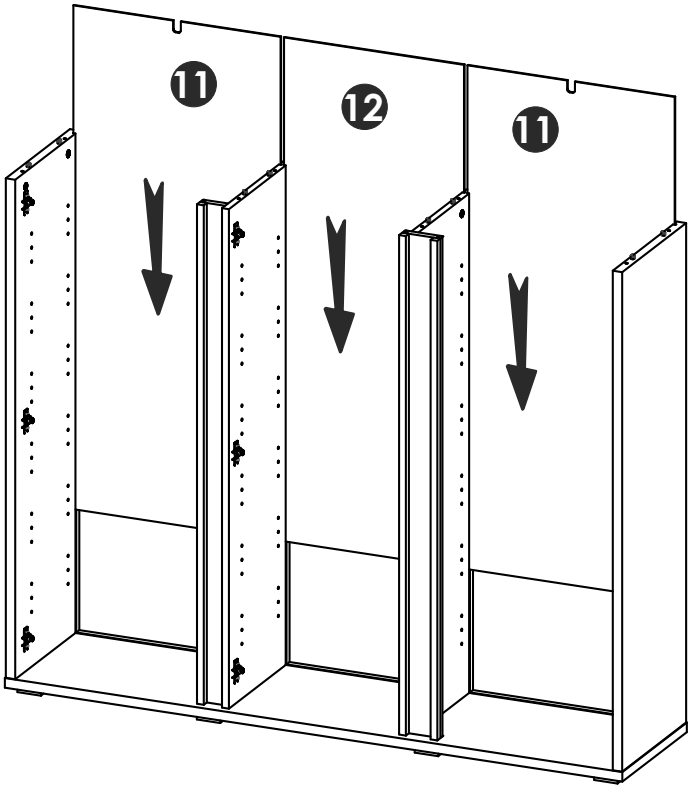

11

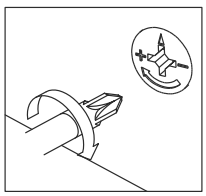

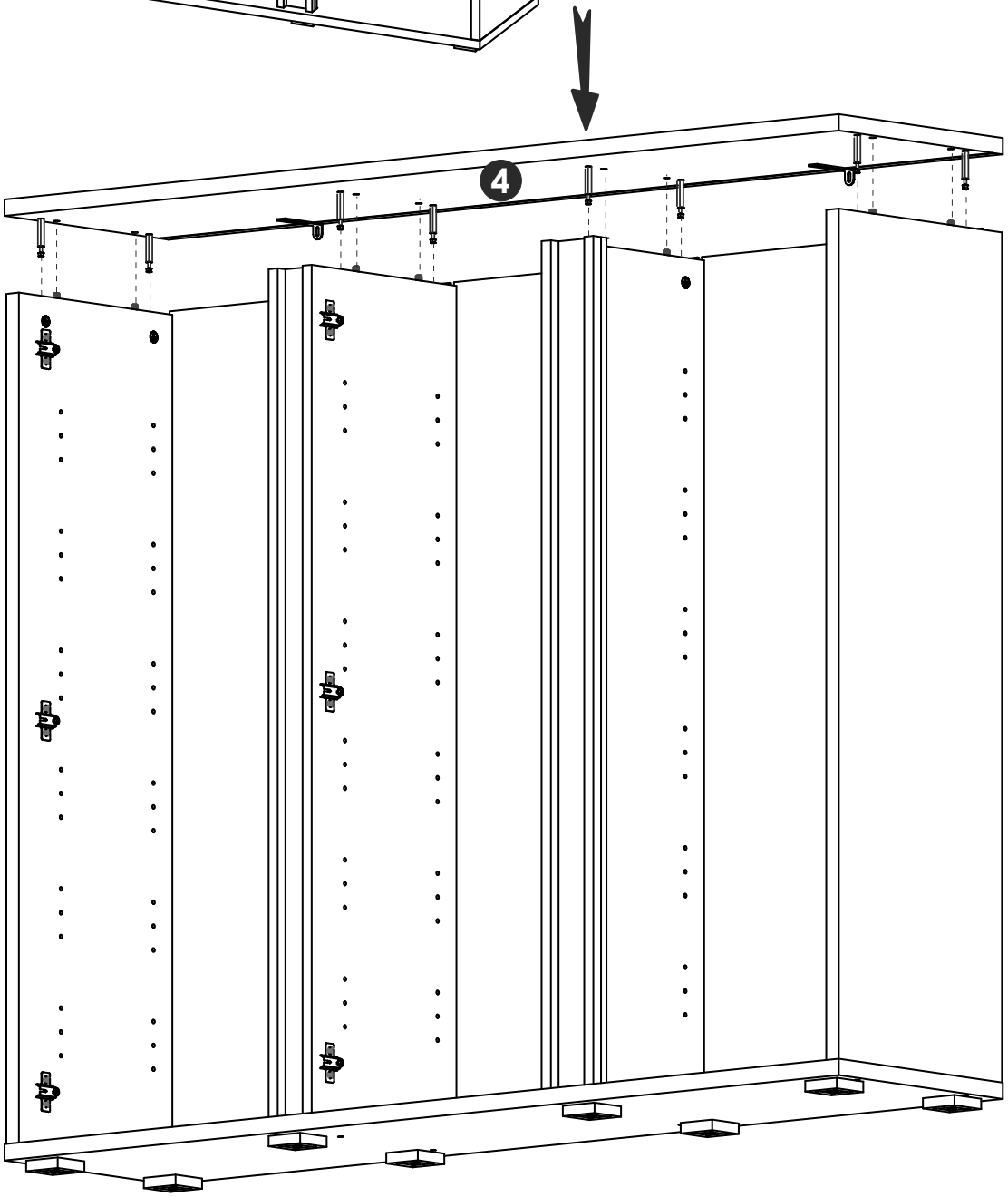

12

D0	3 x 15 mm	x36	M1	x36

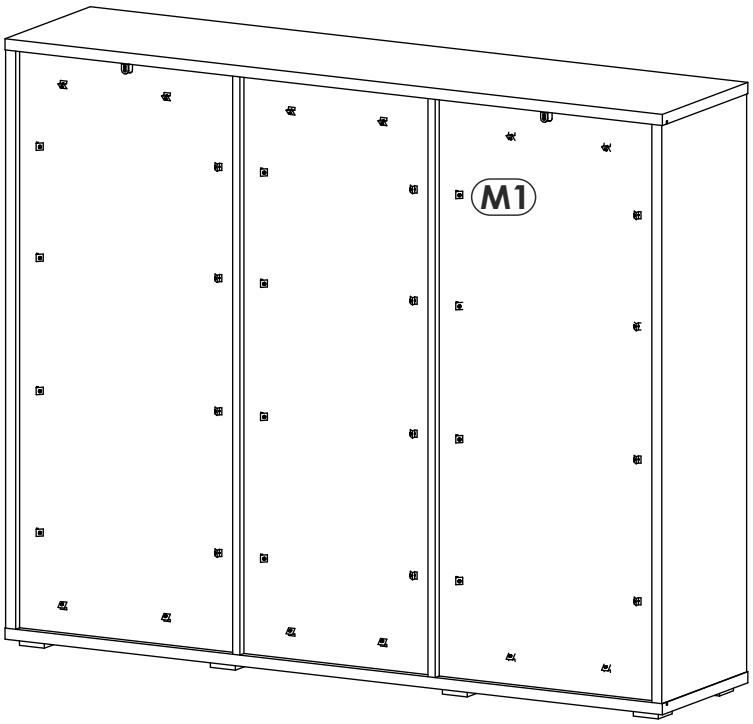

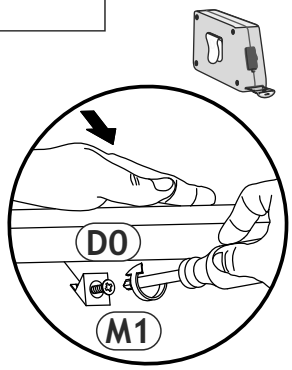

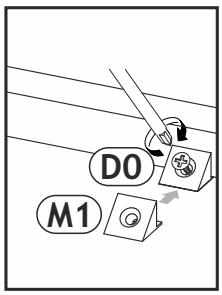

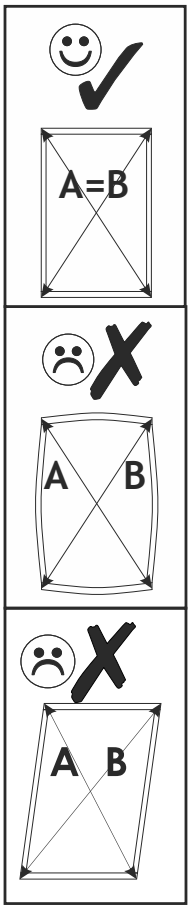

13

Q3	x72	U0	x6

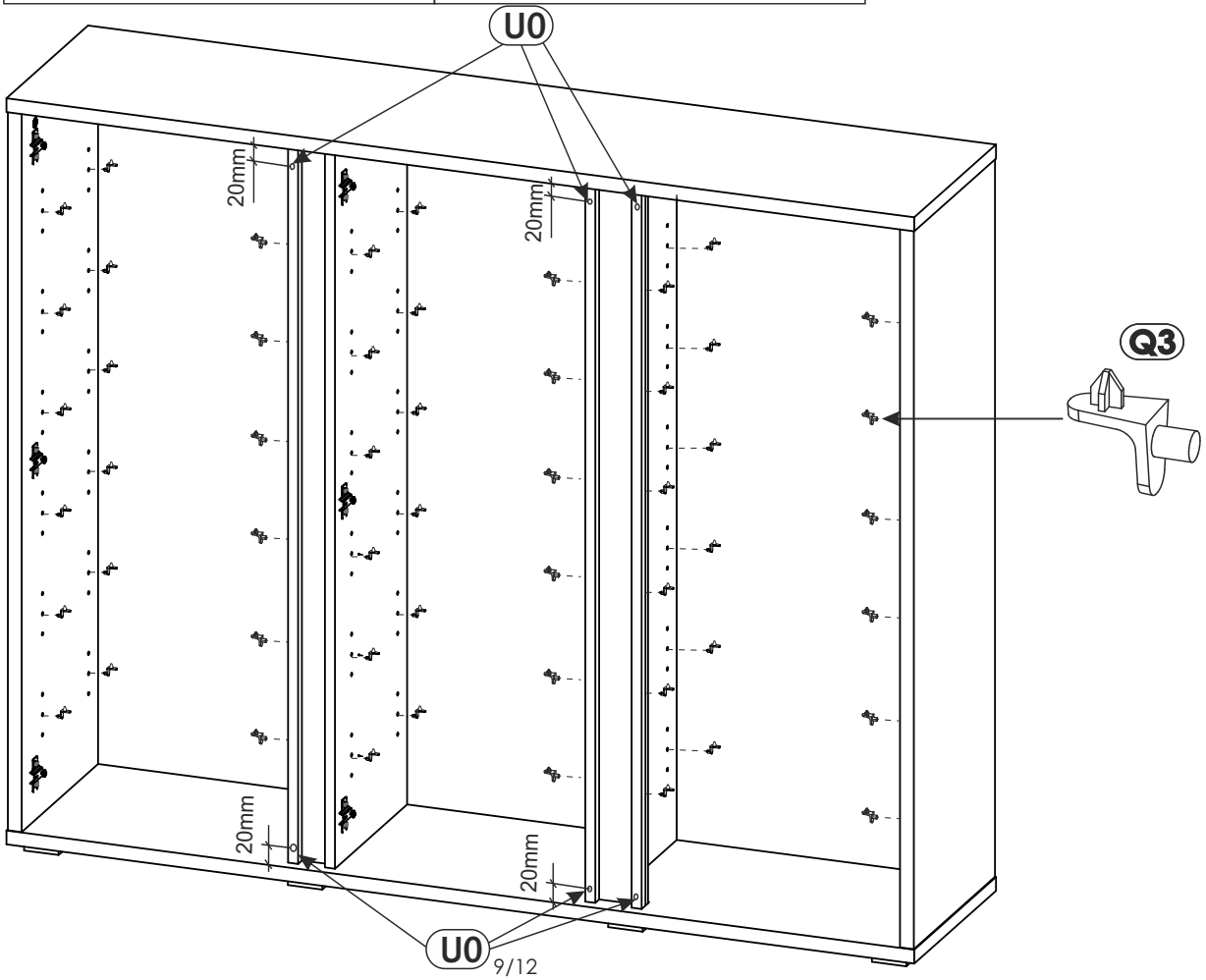

14

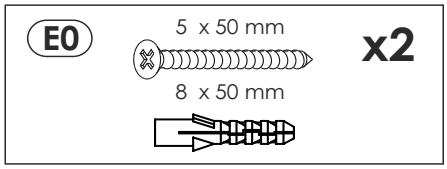

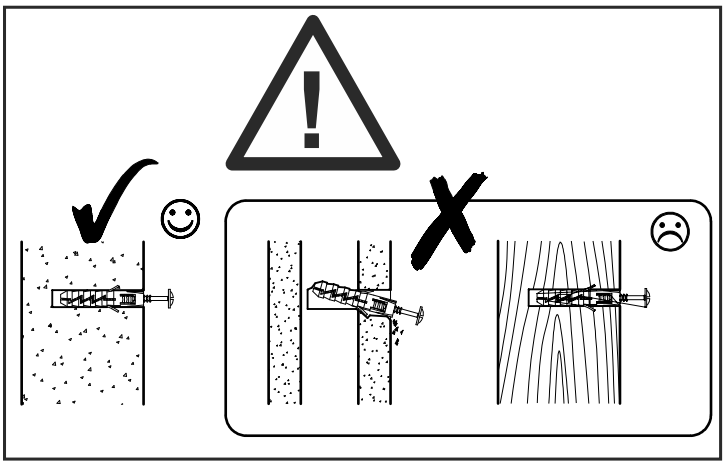

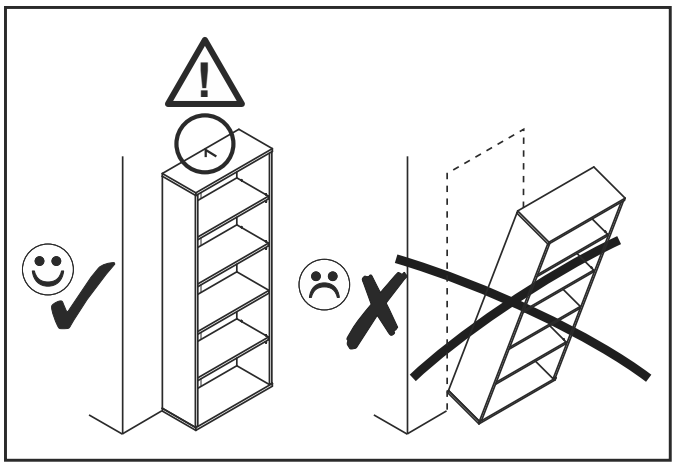

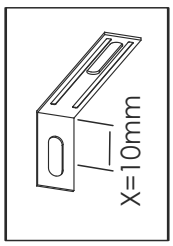

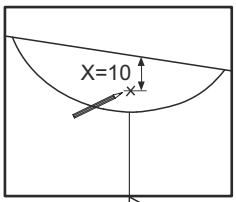

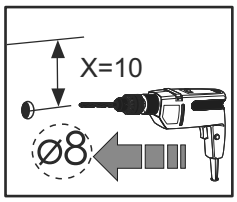

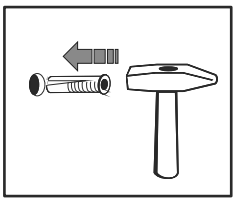

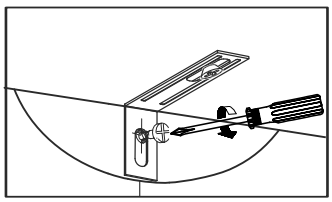



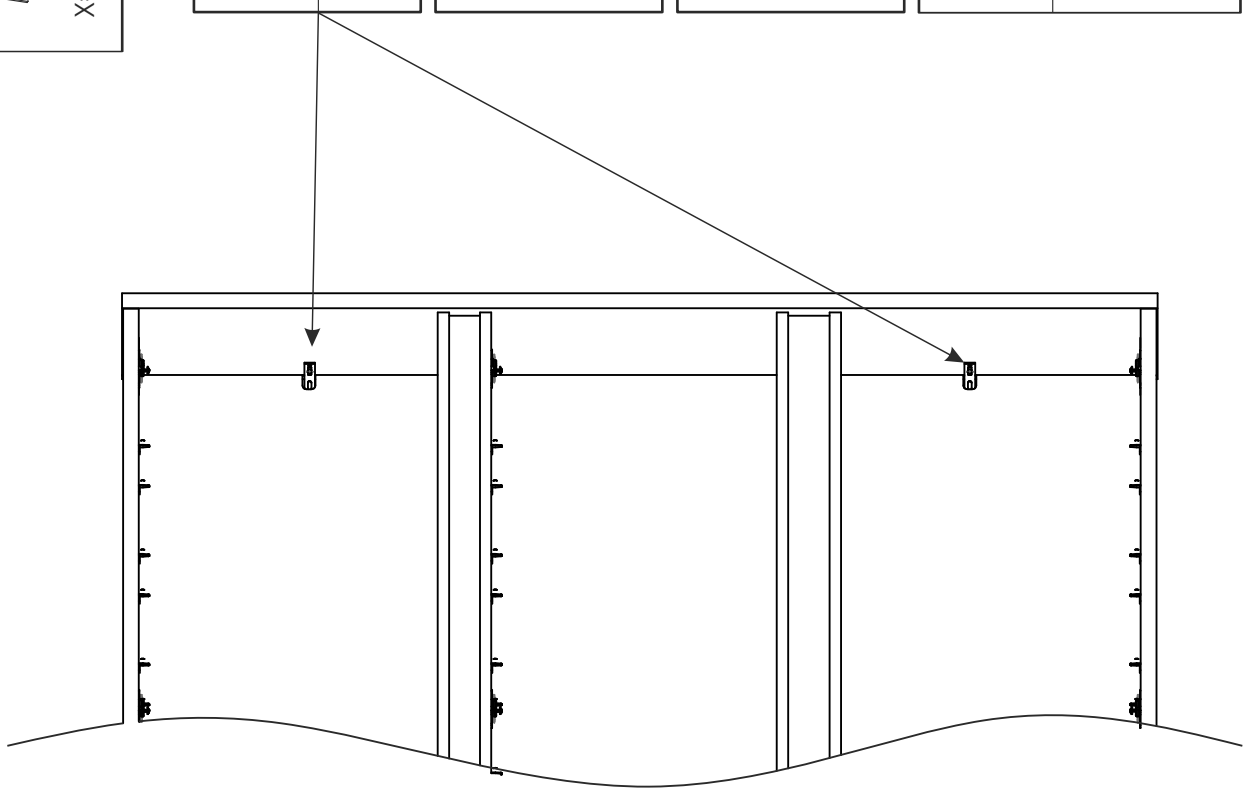

15

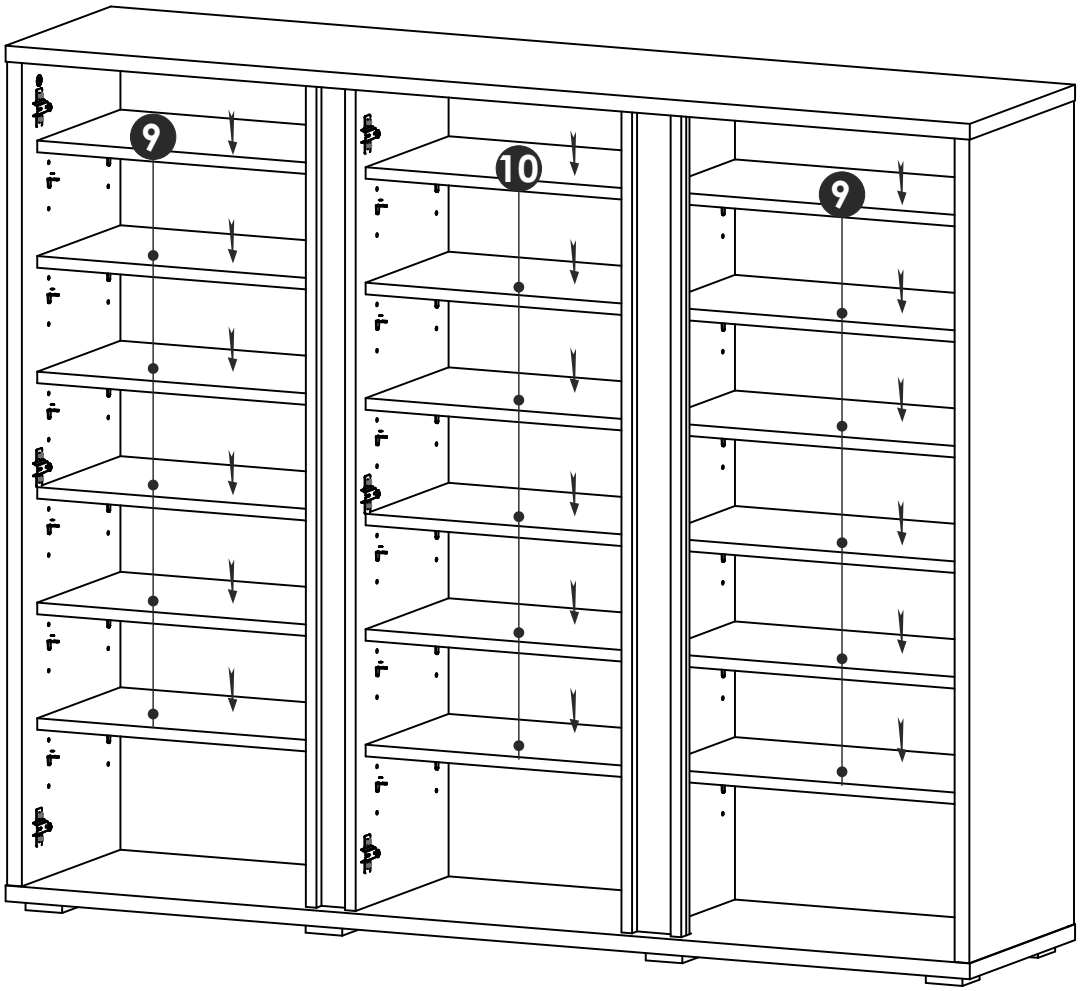



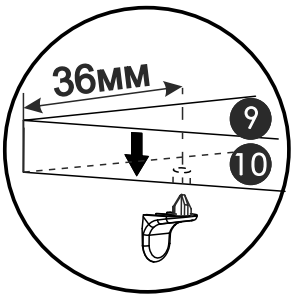

16

D10	J4	J8
4 x 16 mm x18	x6	x3

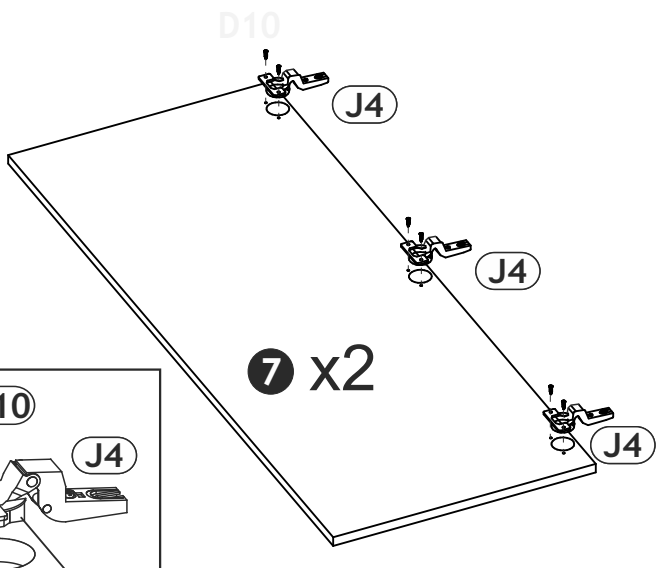

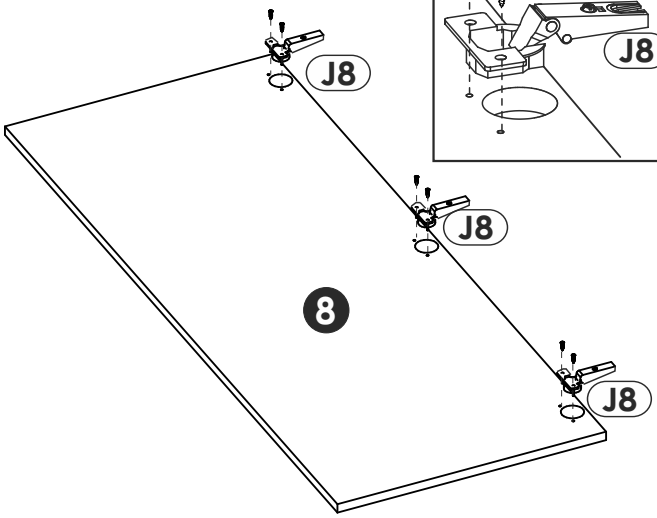

17

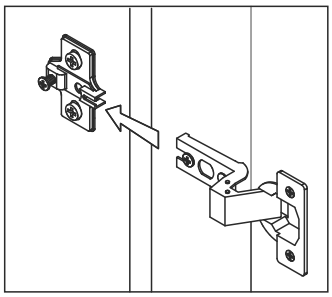

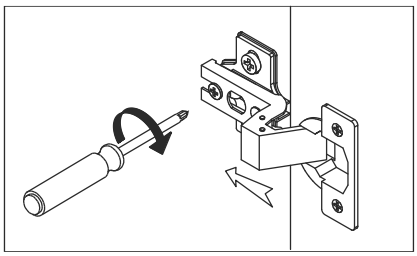

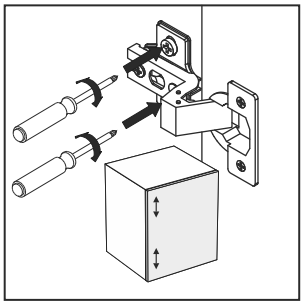

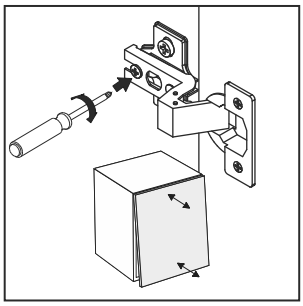

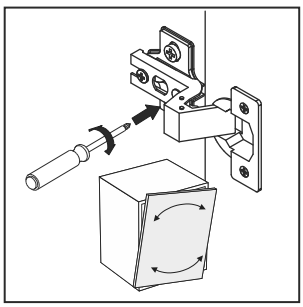

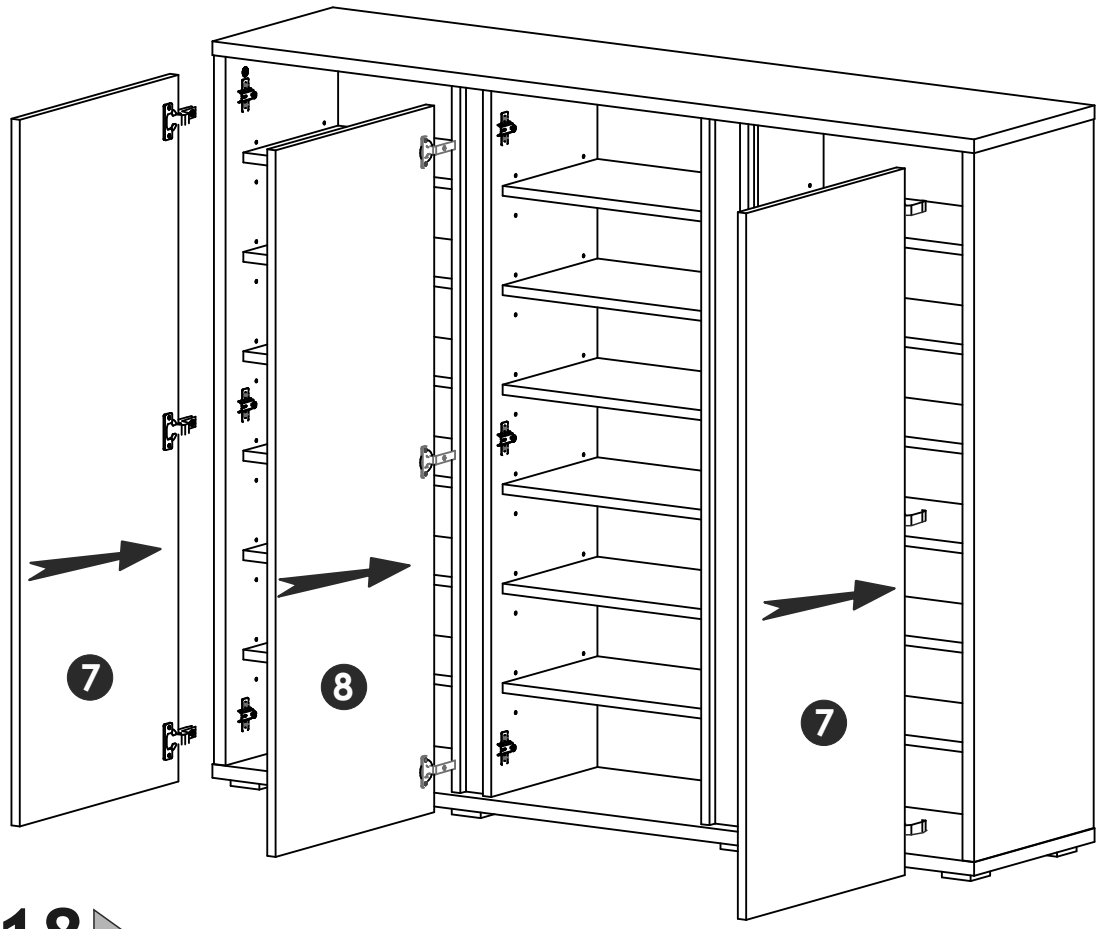

18

C0	x8	LOGO...	x1



