LIV - SCHUHSCHRANK 6T

00030003/02
00030003/05
00030003/22
00030003/52
00030003/62
00030003/72

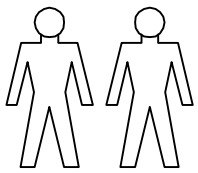

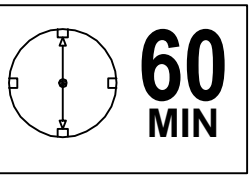

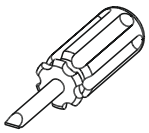

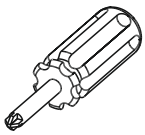

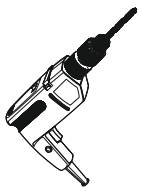

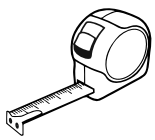

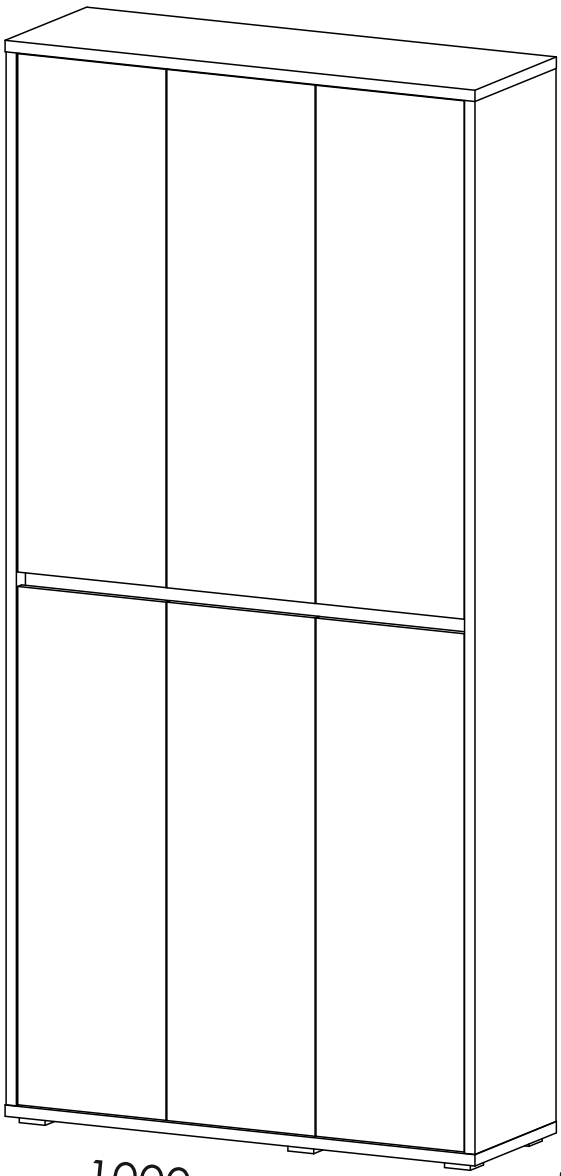

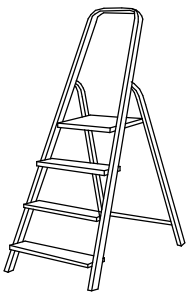

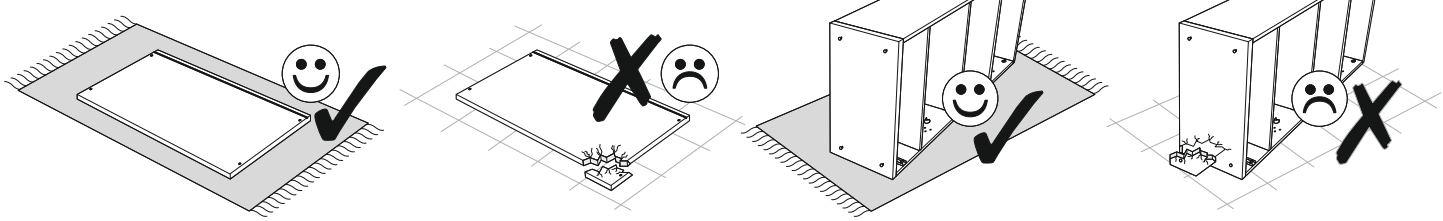

B2 f 7 x 70 mm x12 	C0 x4 	C2 x8 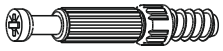
C8 x2 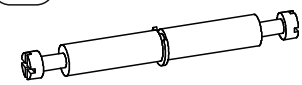	D0 3 x 15 mm x40 	D10 4 x 16 mm x24 
D12 4 x 25 mm x24 	D21 5 x 13 mm x2 	E0 5 x 50 mm 8 x 50 mm x2 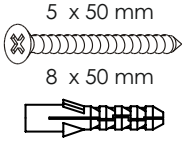
J4 x8 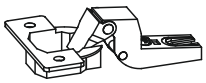	J5 x4 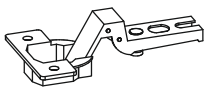	J6 x12 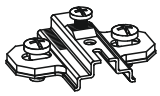
K 4mm x1 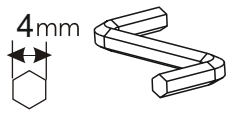	M1 x40 	P0 x2 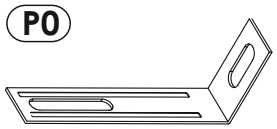
Q3 x80 	T5 x6 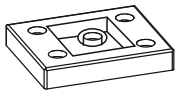	U0 x12 
* x1 LOGO...		

* 00030003/02
00030003/05
00030003/22
00030003/72

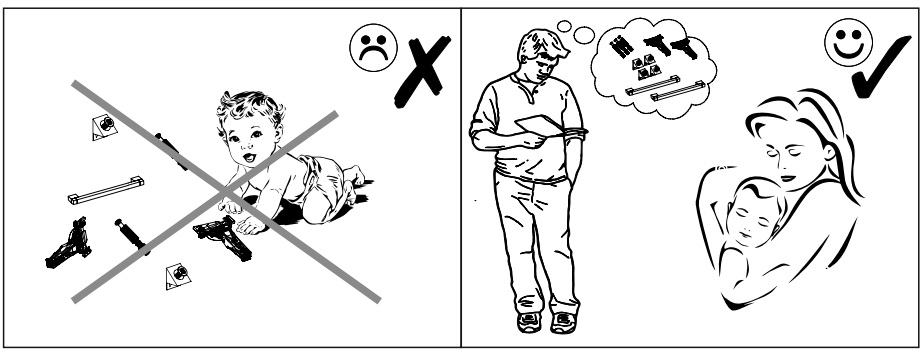

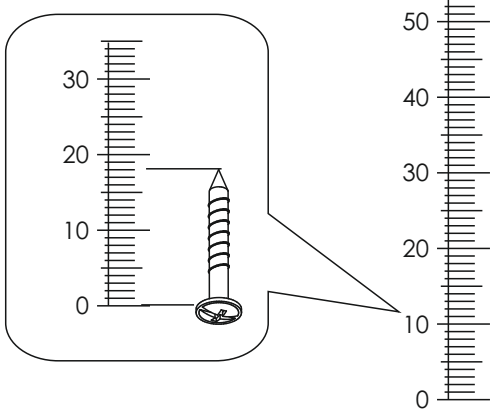

1	1004	315	16	x3	2/4
2	1004	315	16	x3	2/4
3	1012	319	16	x1	3/4
4	1012	319	16	x1	3/4
5	627	298	16	x10	4/4
6	310	298	16	x10	3/4
7	953	288	16	x1	3/4
8	999	340	22	x1	1/4
9	999	340	22	x1	1/4
10	2040	338	22	x2	1/4
11	1021	318	3	x2	2/4
12	1021	636	3	x2	2/4
13	953	90	32	x1	3/4
					3/4

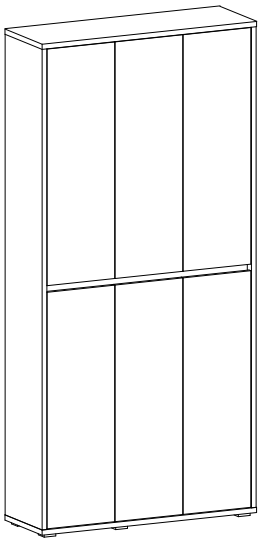

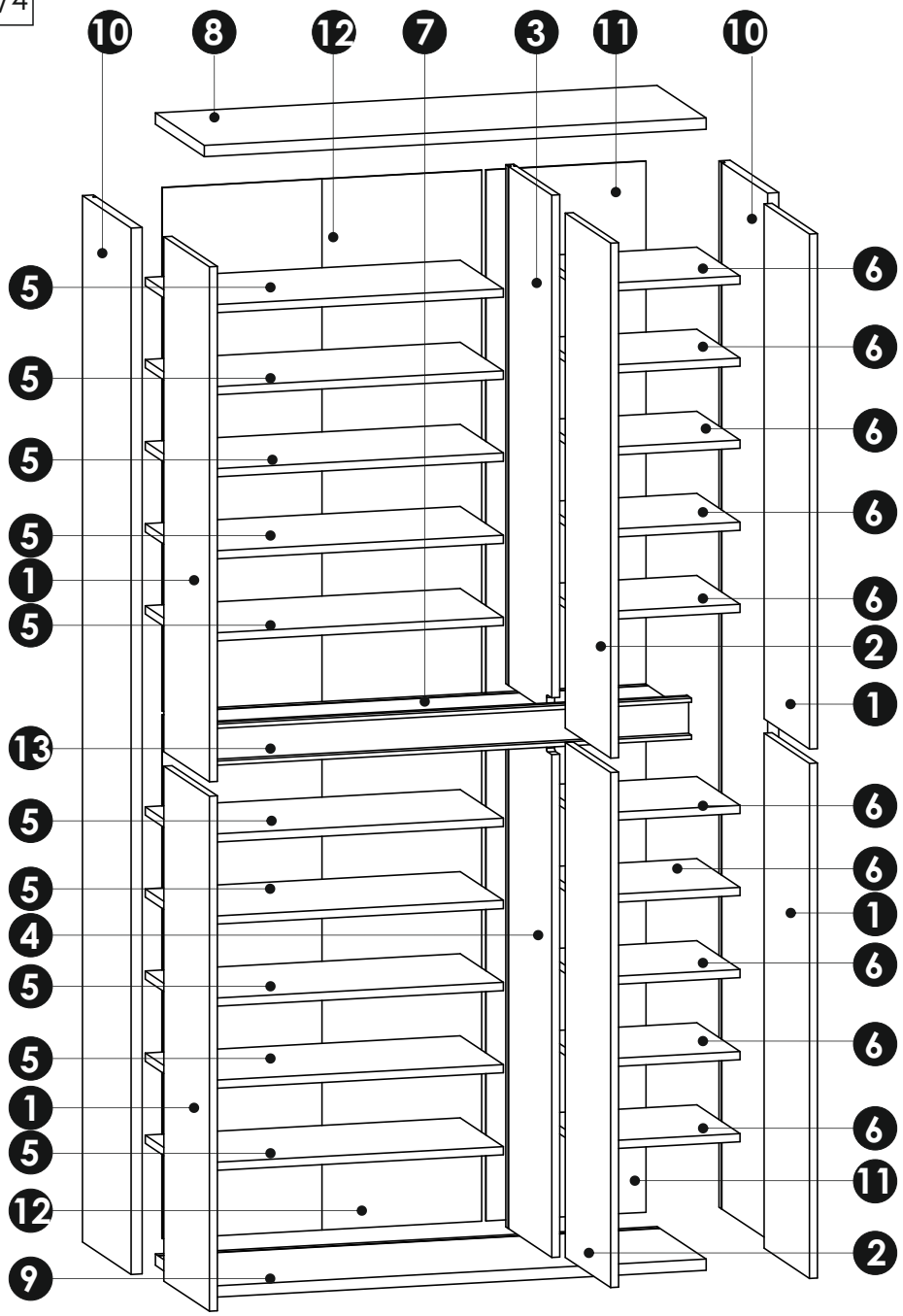

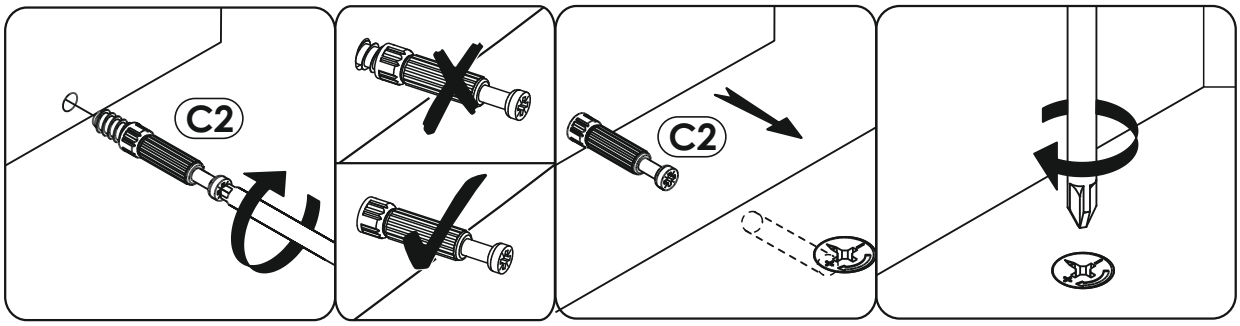

1

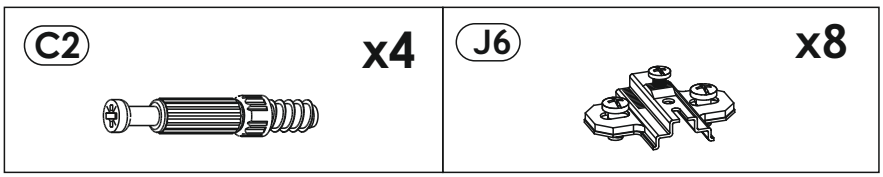

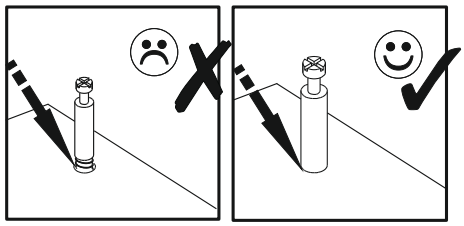

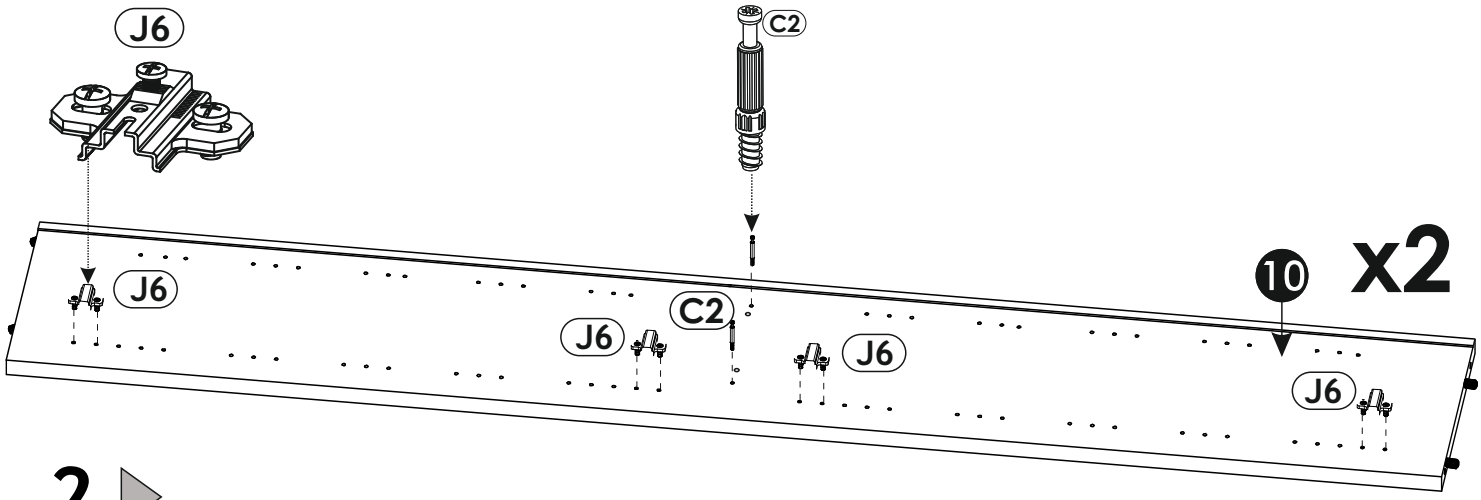

2

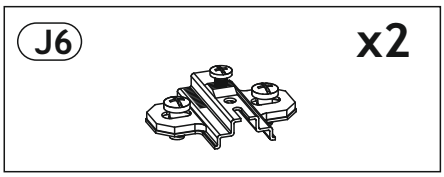

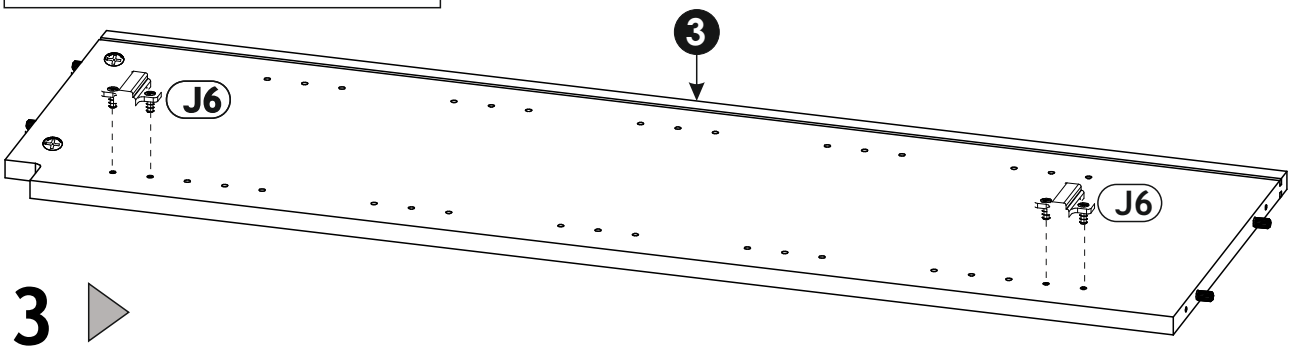

3

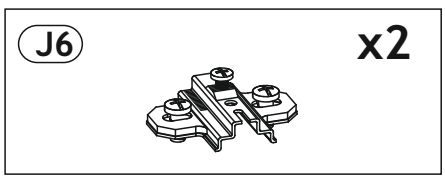

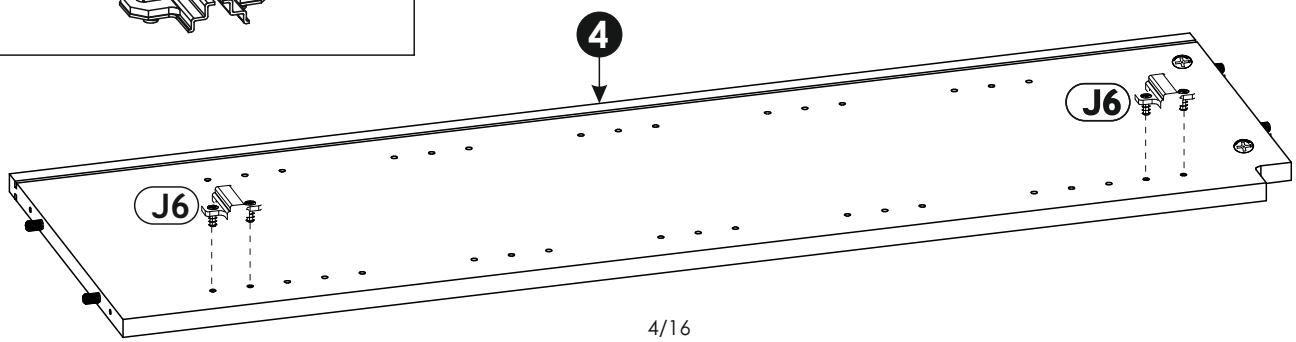

4

C2 x4

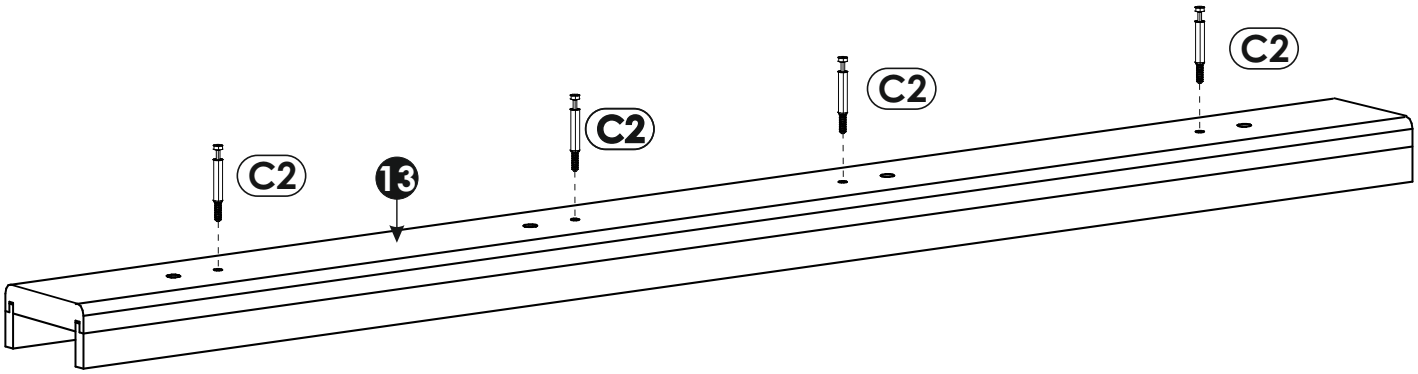

5

D12 4 x 25 mm x24

T5 x6

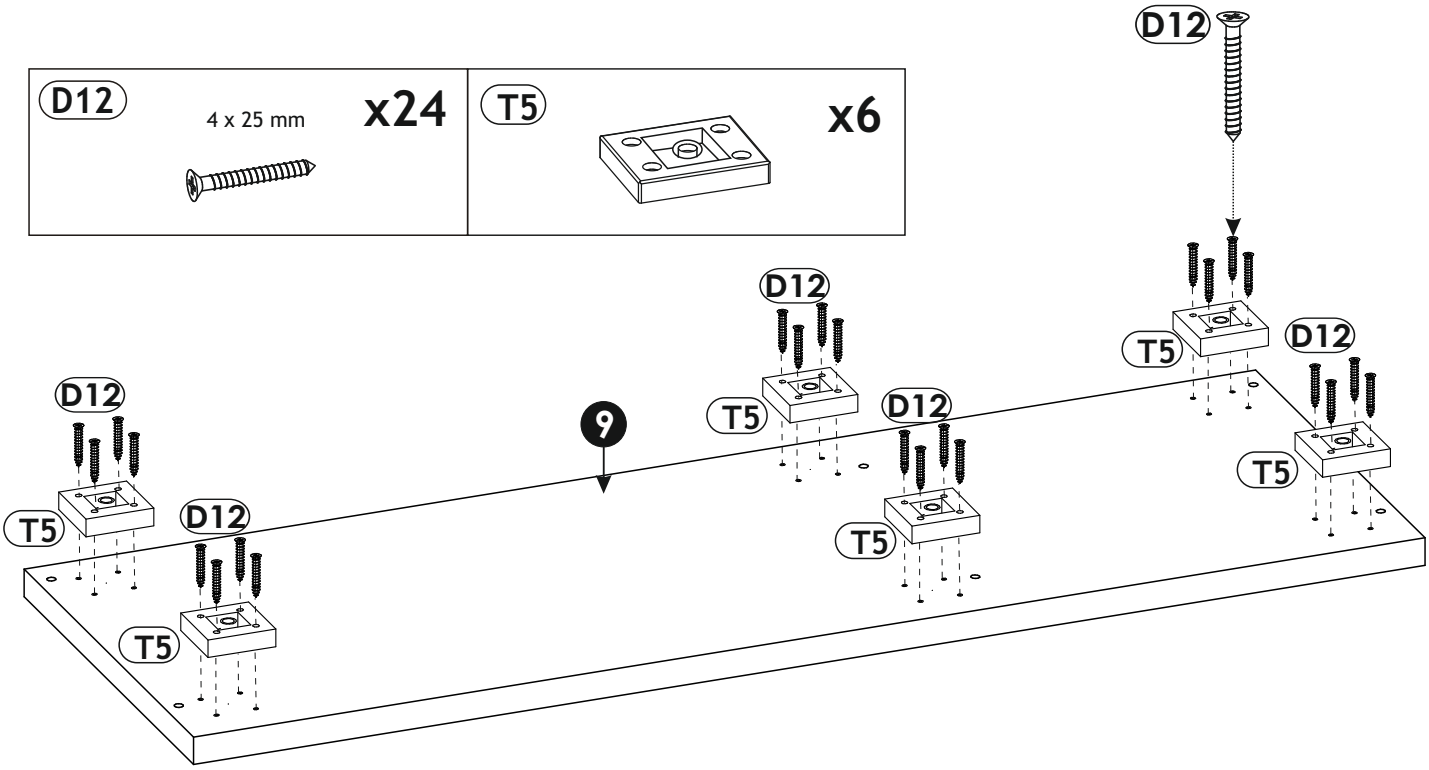

6

D10	4 x 16 mm	x16	J4	x8

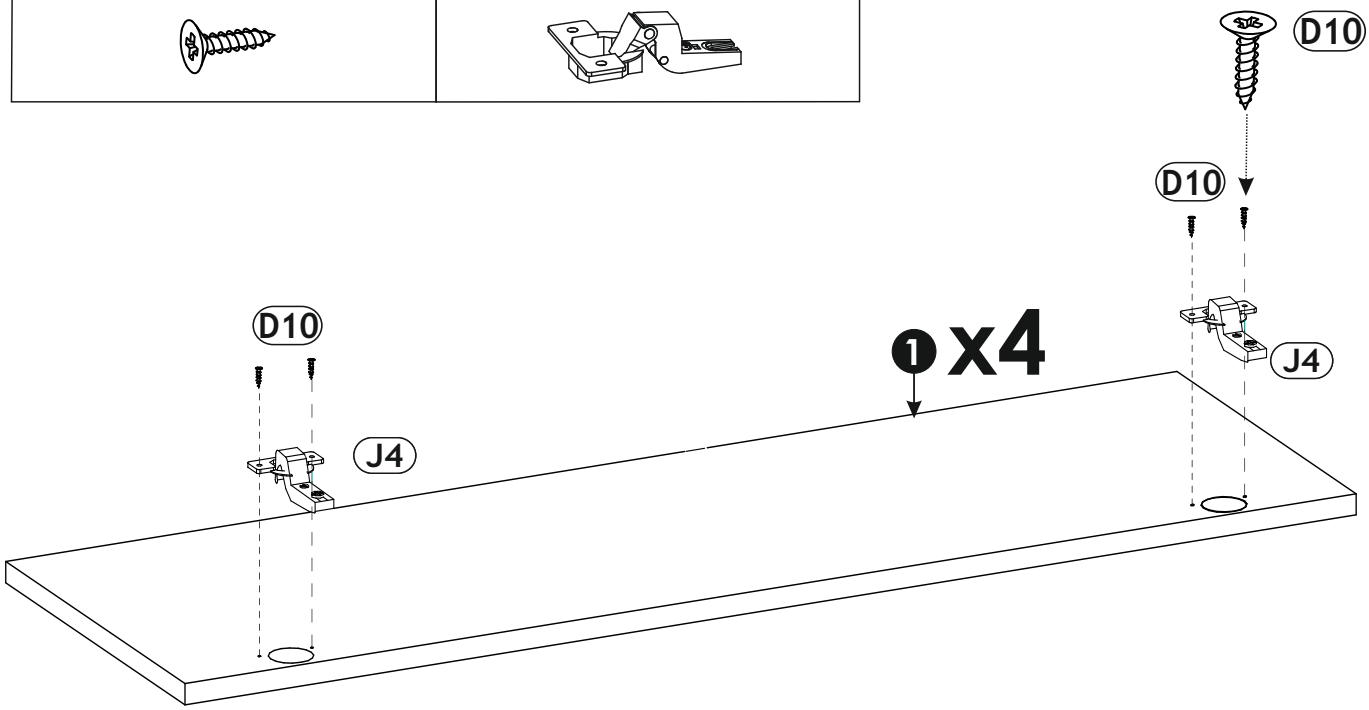

7

D10	4 x 16 mm	x8	J5	x4

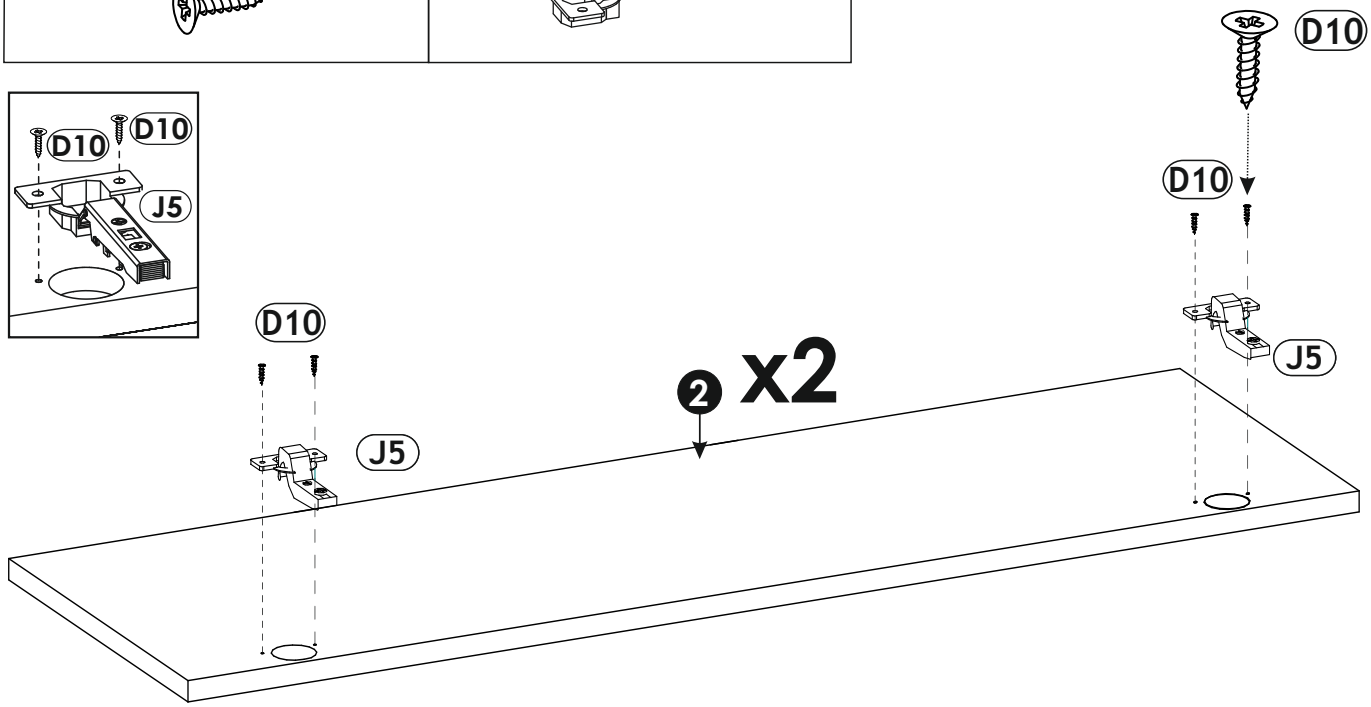

8

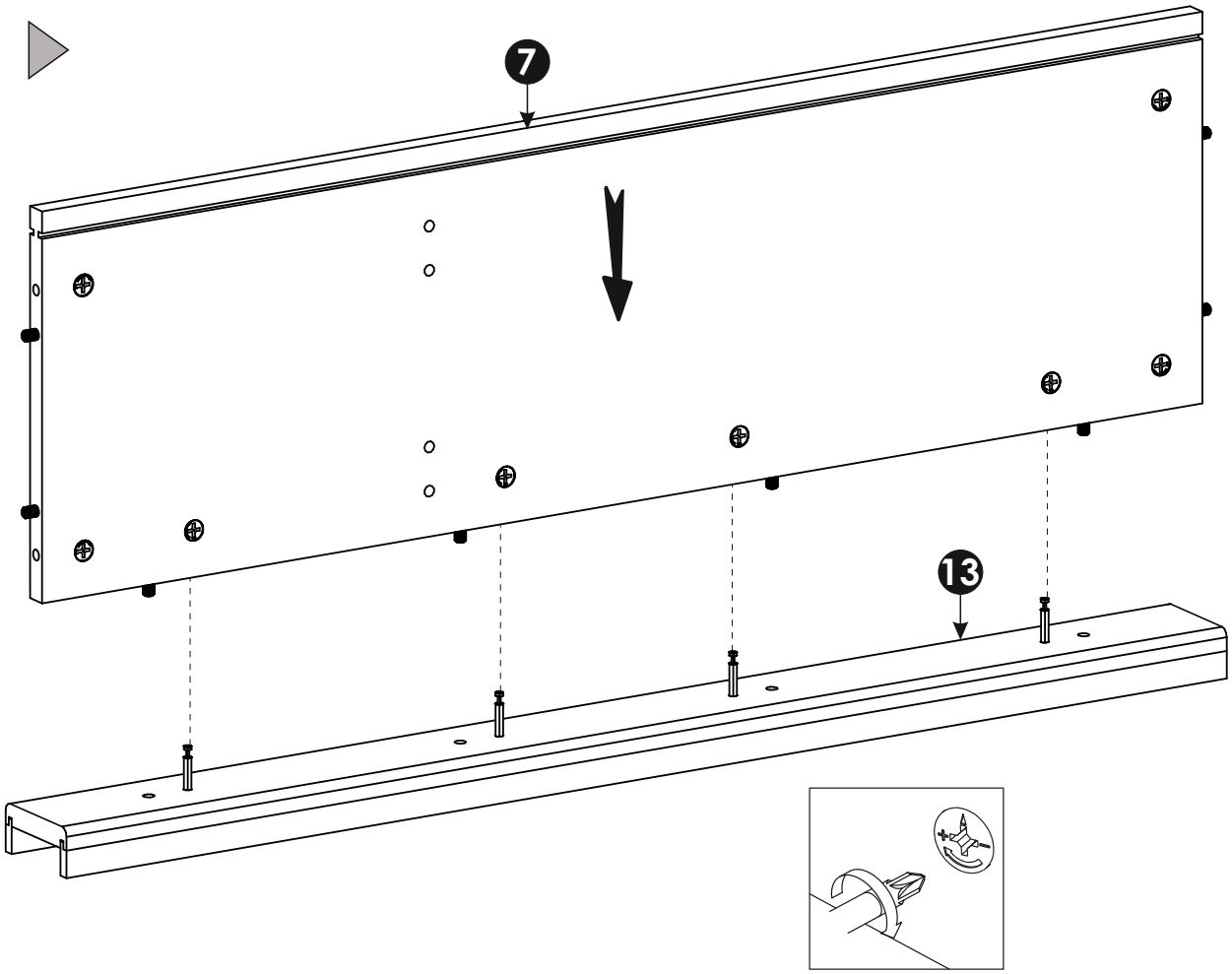

9

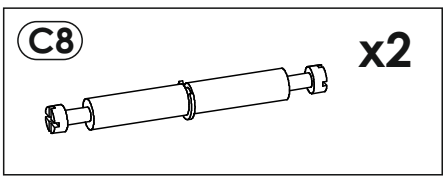

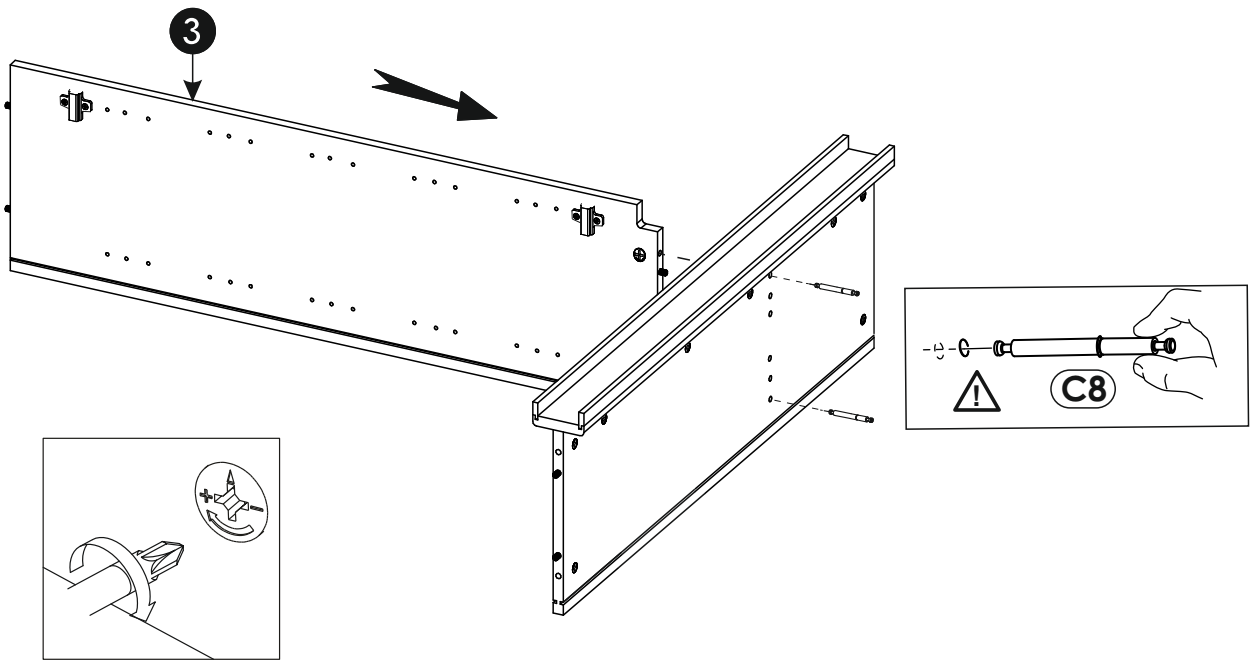

10

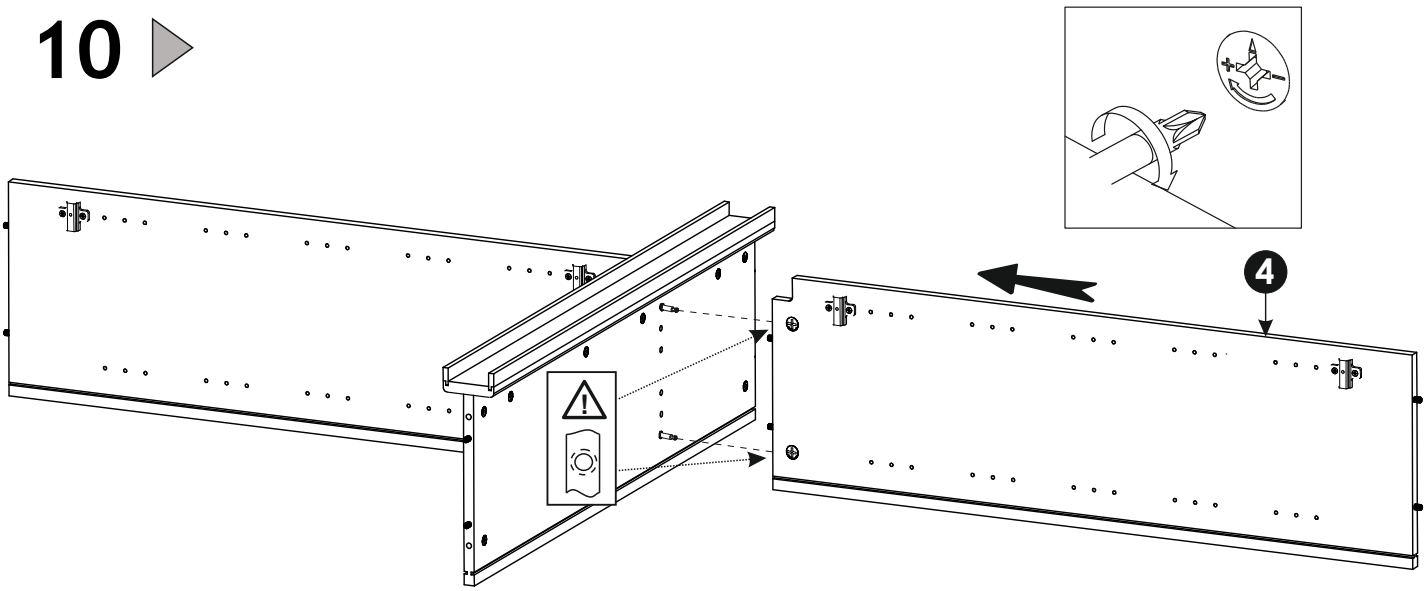

11

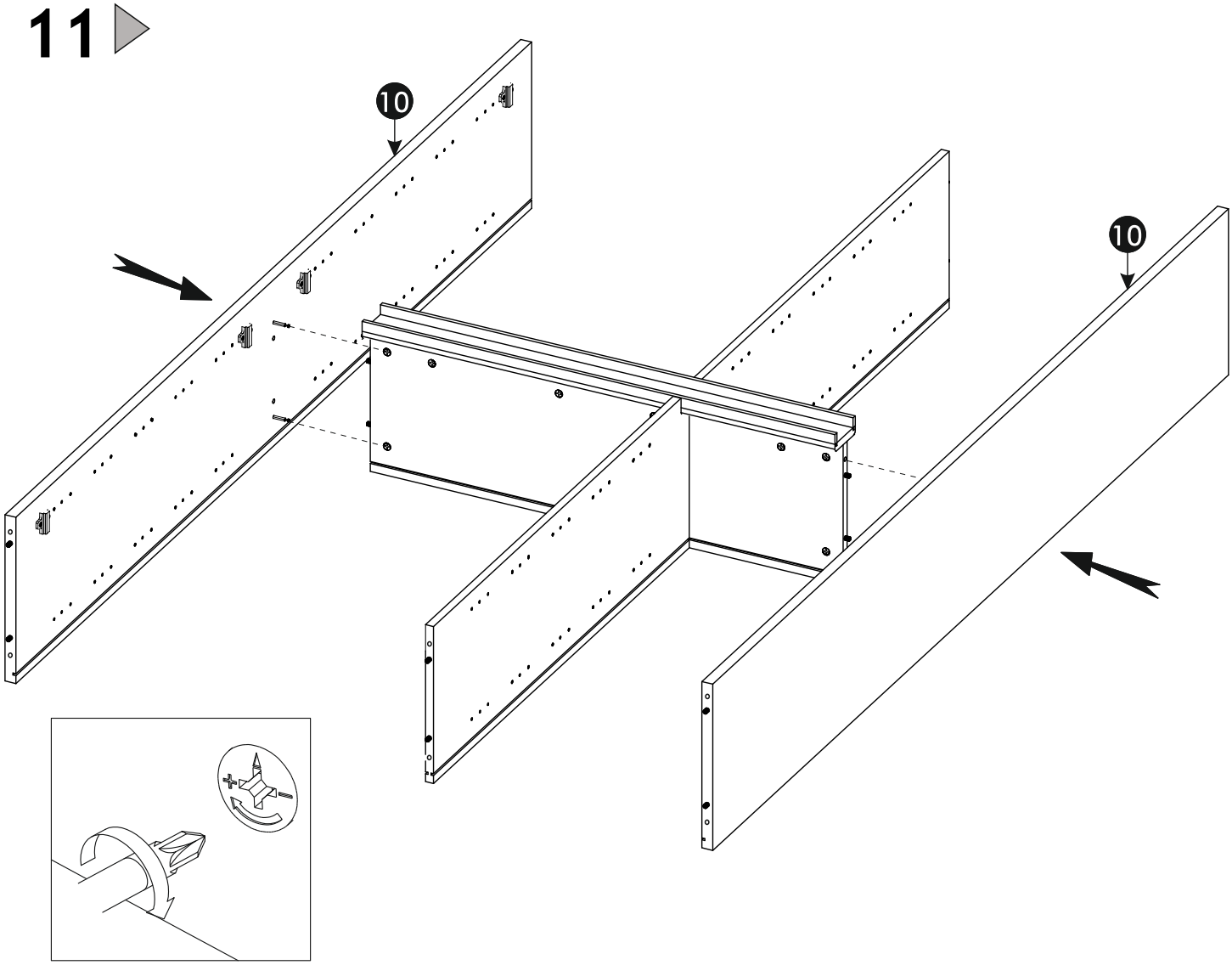

12

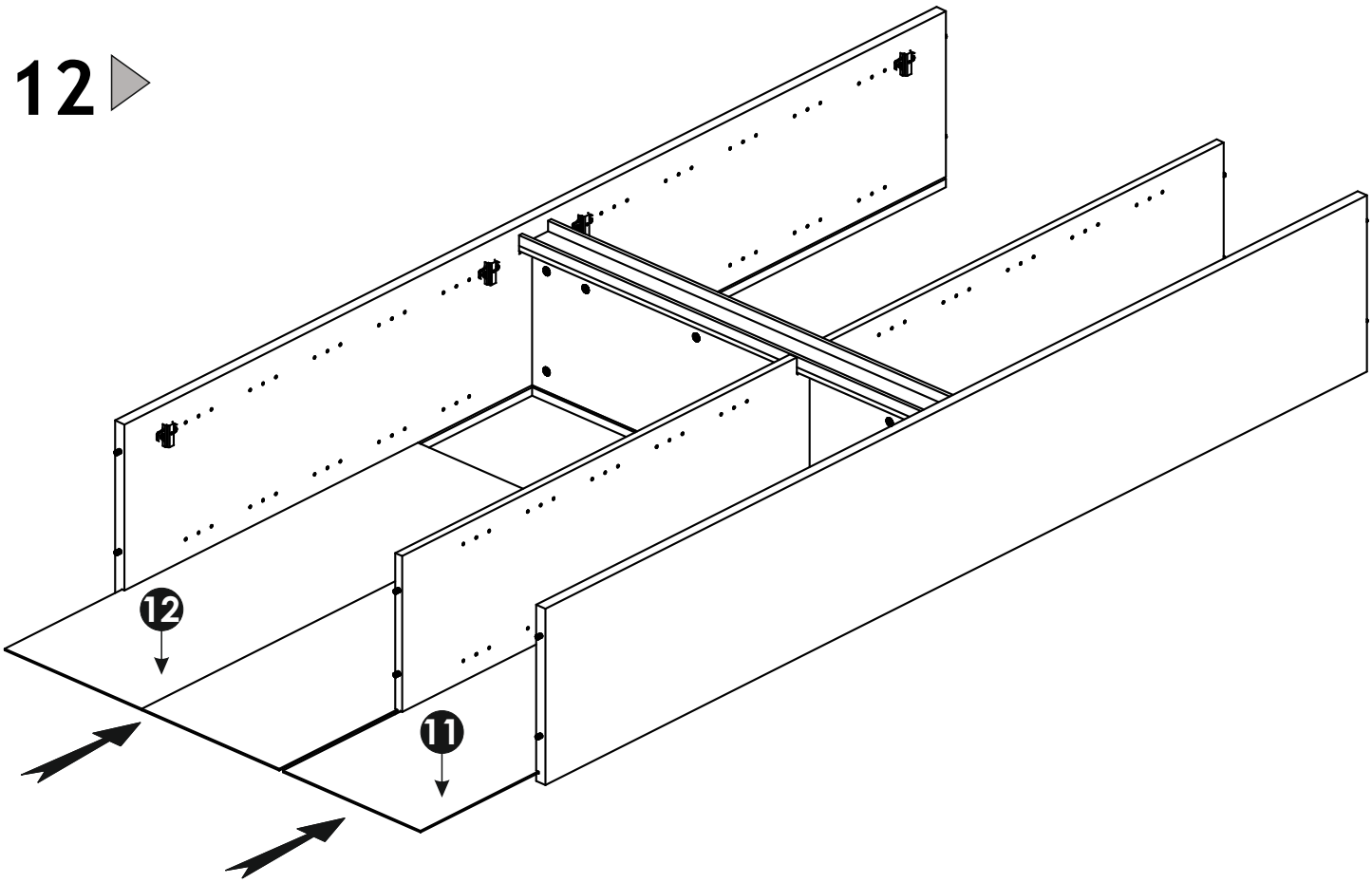

13

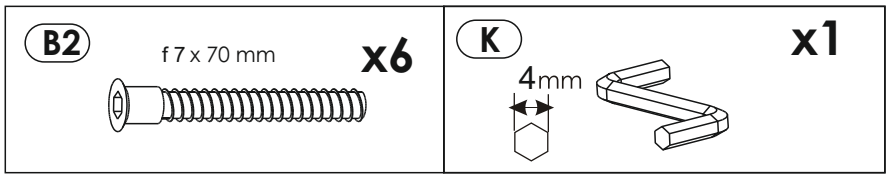

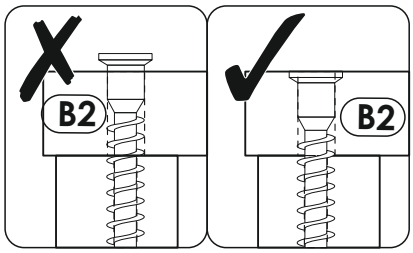

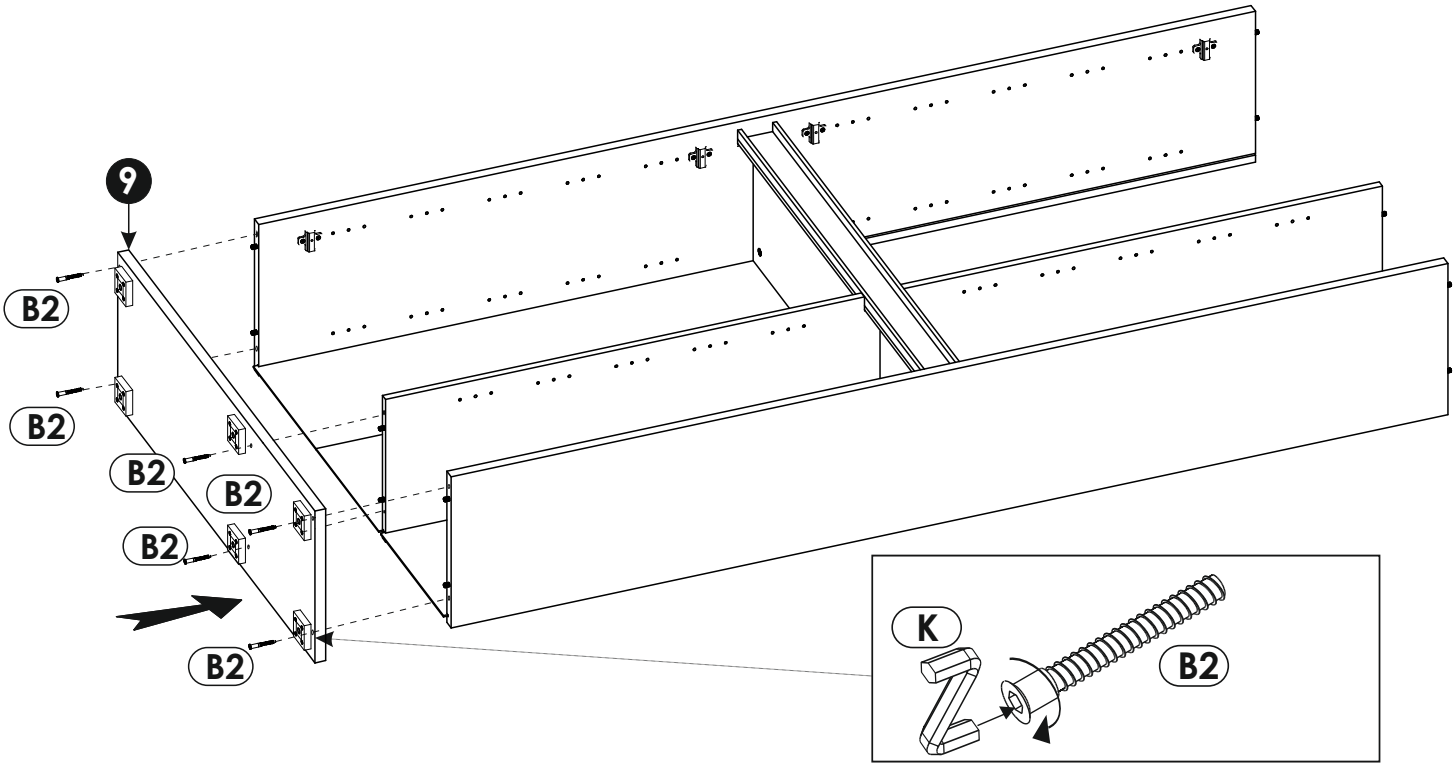

14

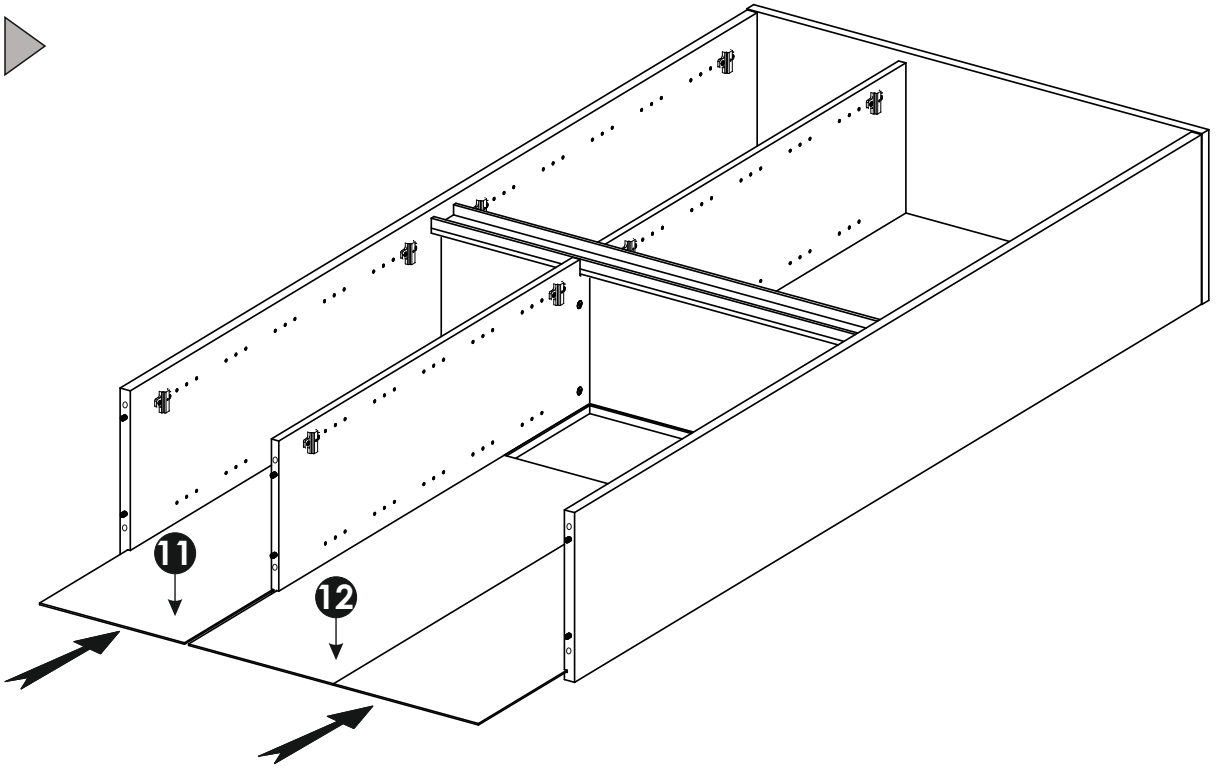
11
12

15

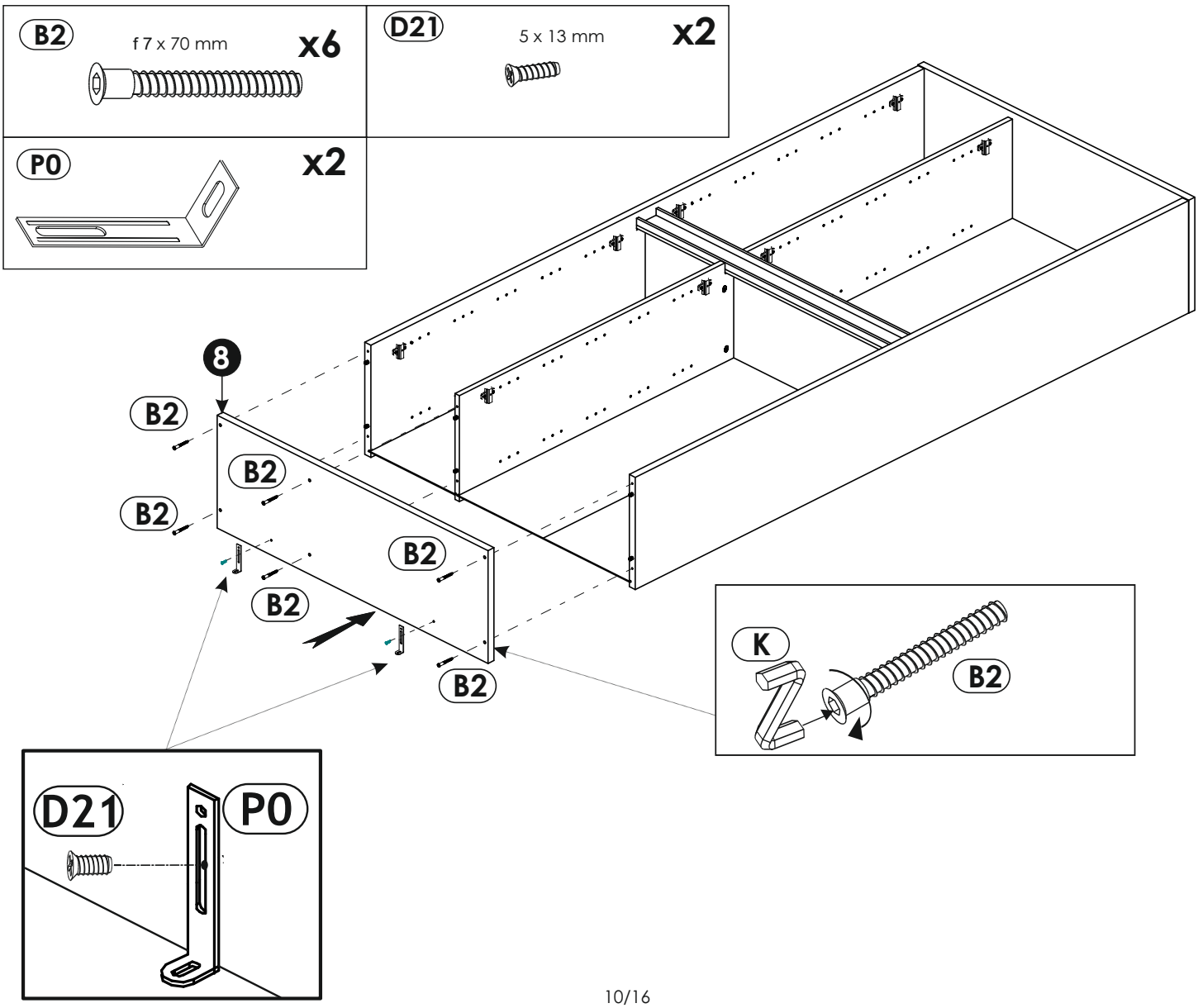
B2
f 7 x 70 mm
x6
D21
5 x 13 mm
x2
P0
x2
8
B2
B2
B2
B2
B2
B2
K
B2
D21
P0

16

D0	3 x 15 mm	x40	M1	x40

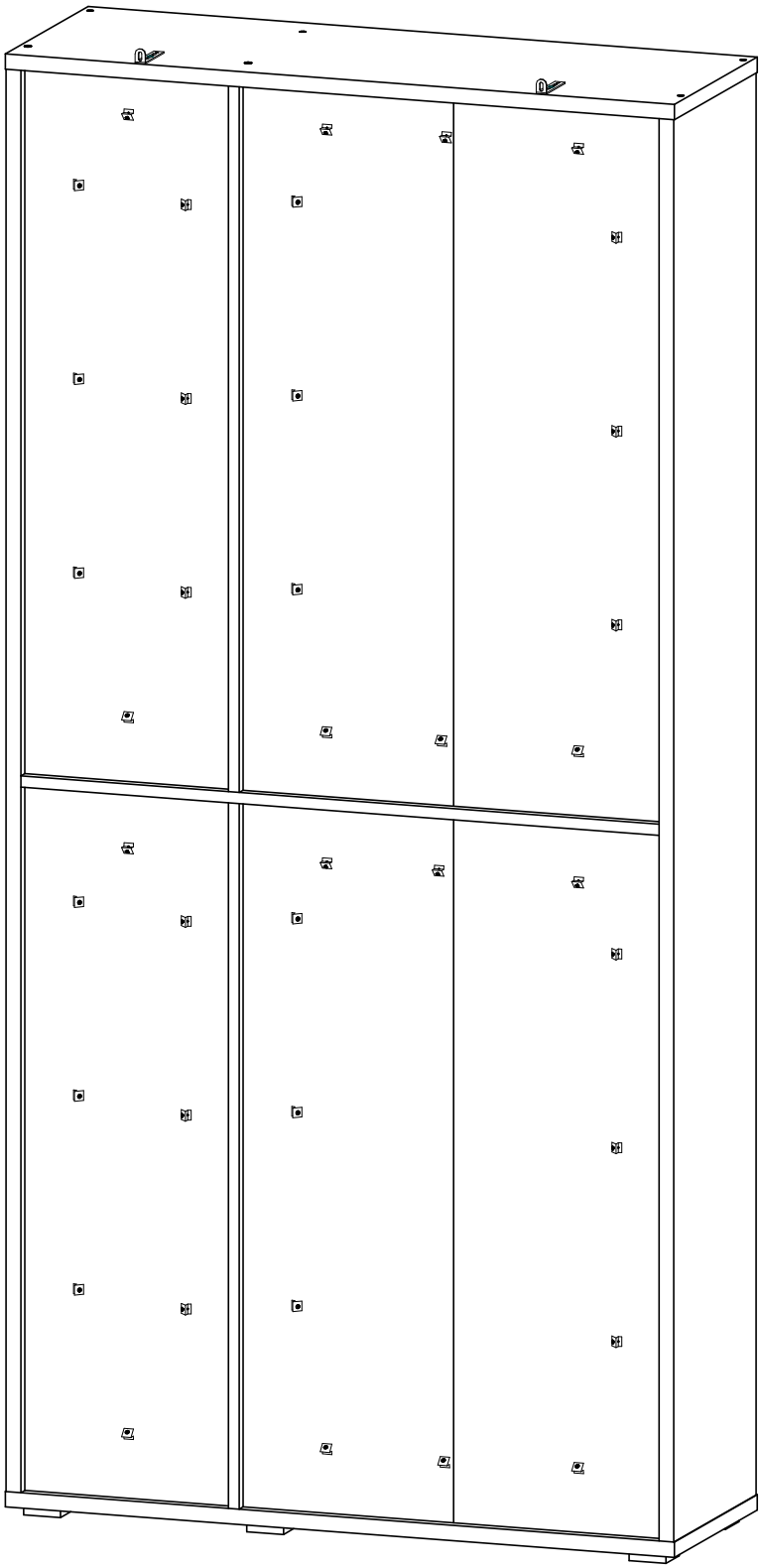

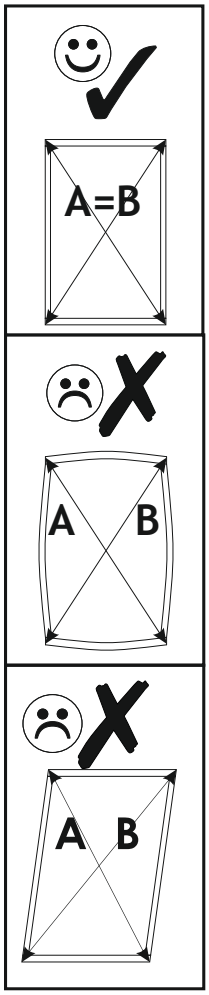

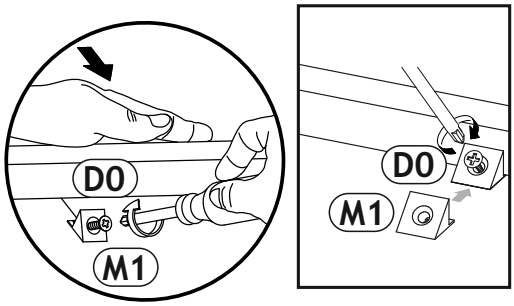

17

Q3 x80

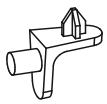

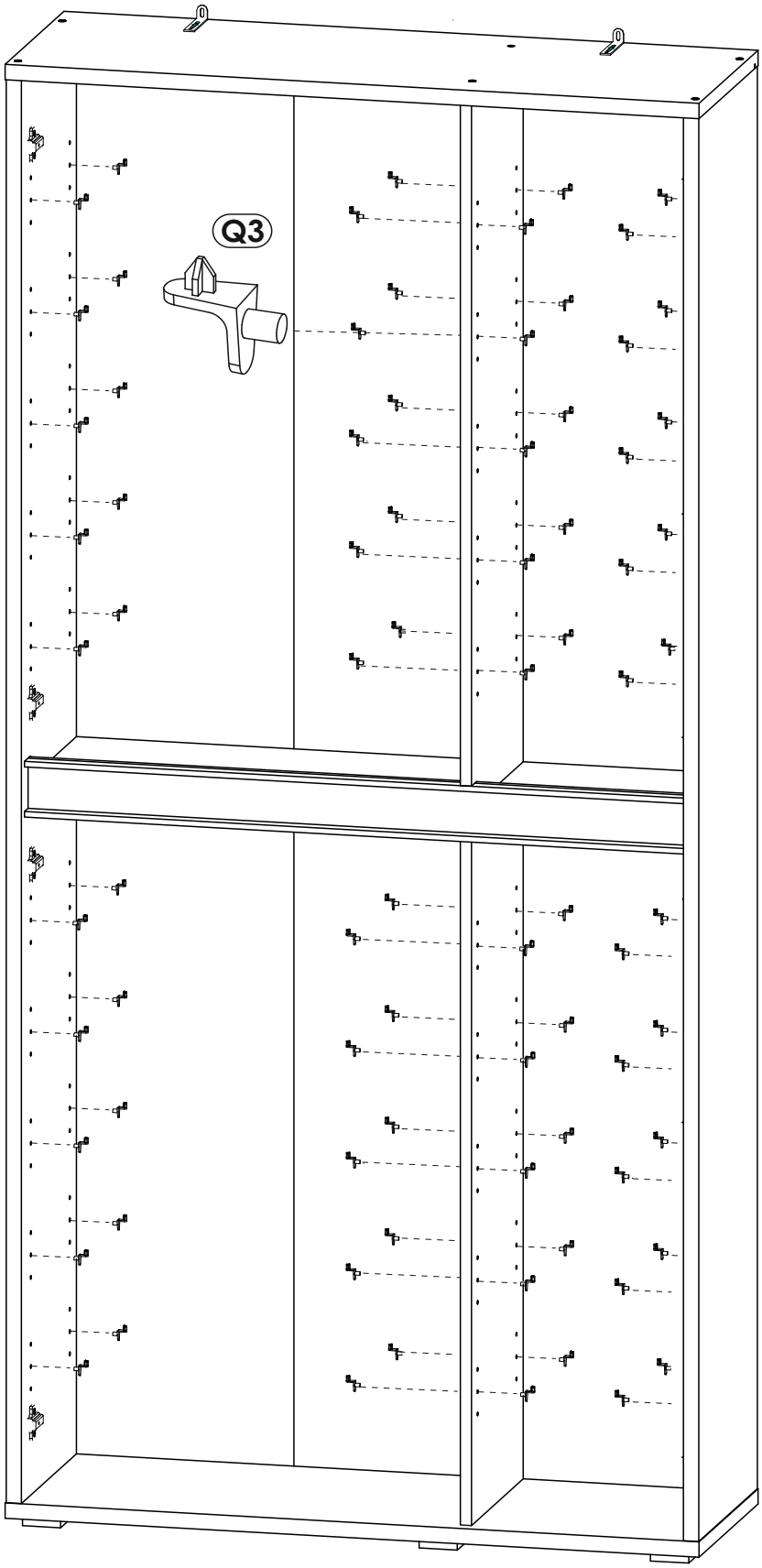

18

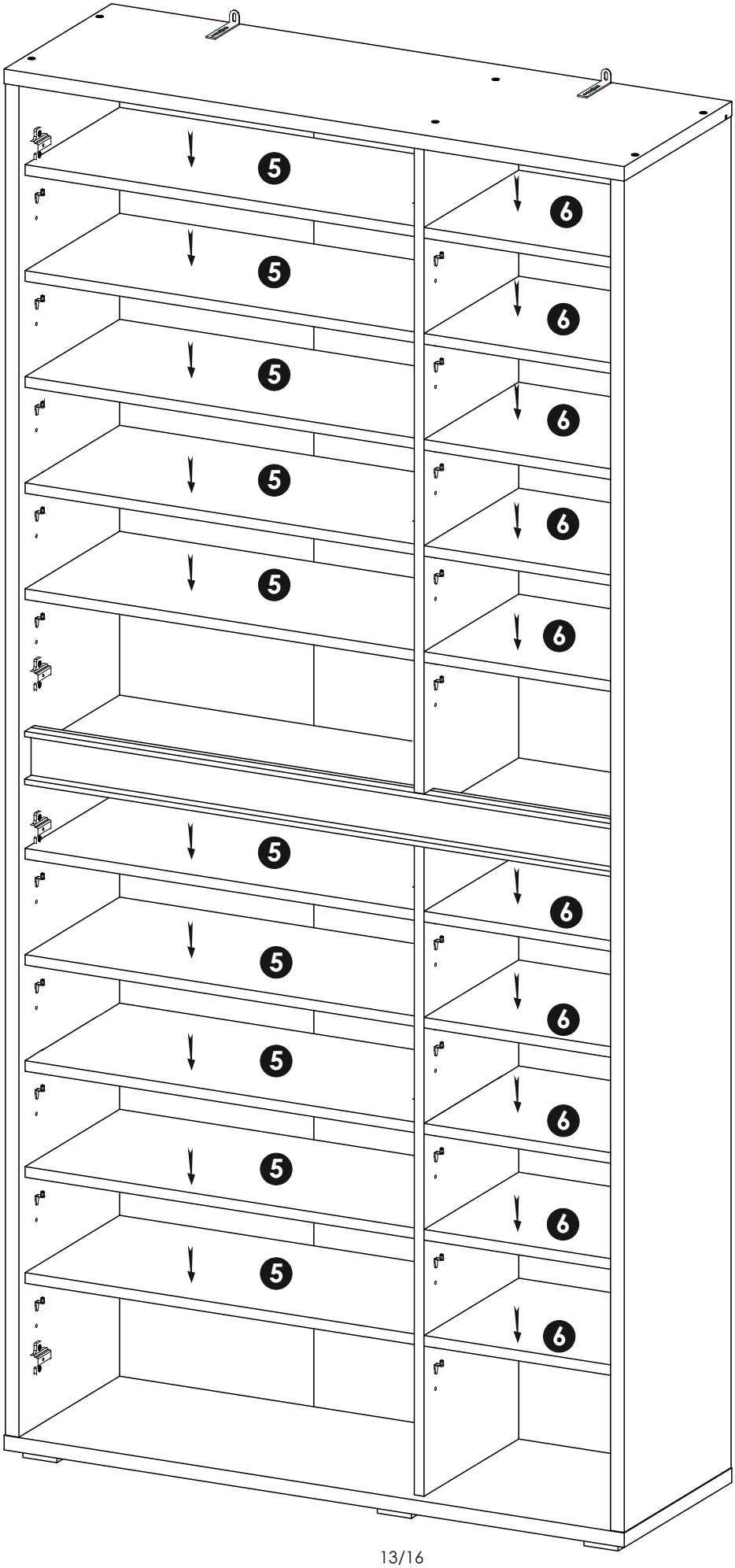

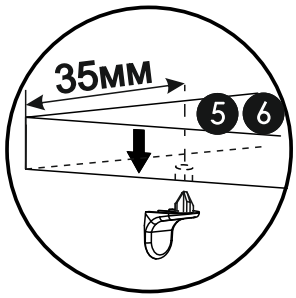

19

E0		U0	
5 x 50 mm 8 x 50 mm	x2		x12

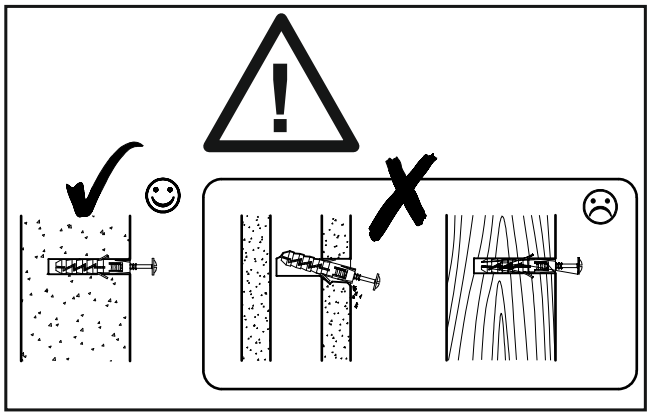

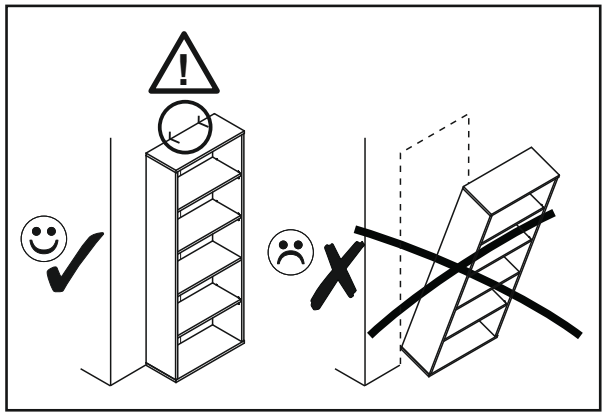

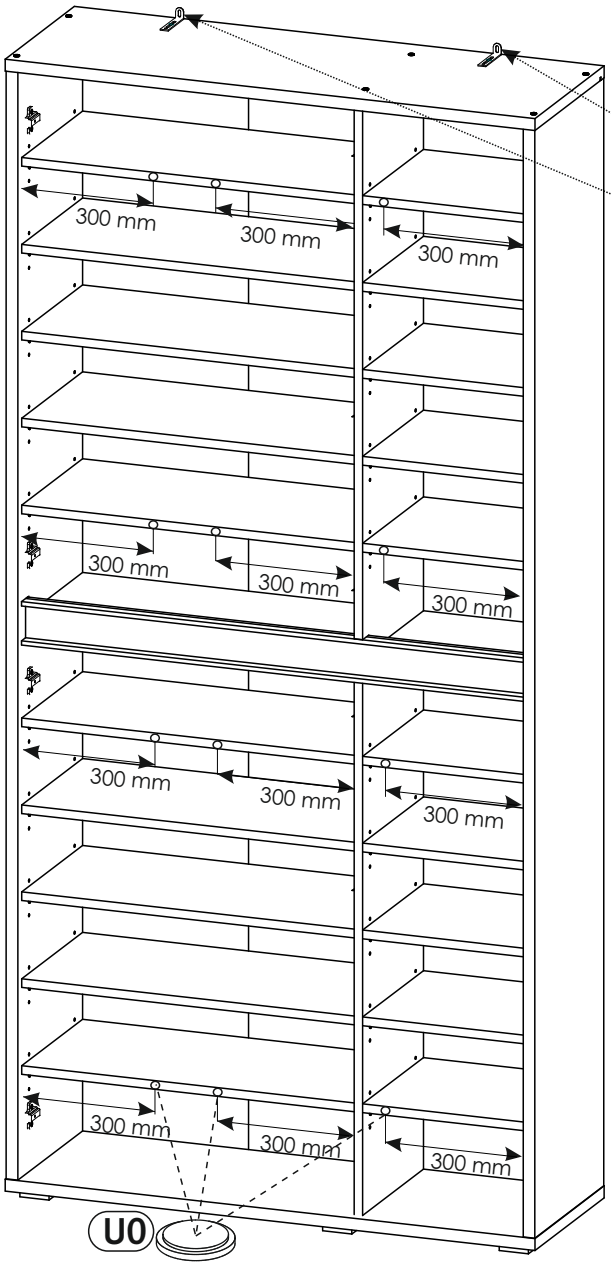

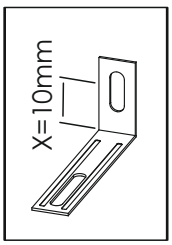

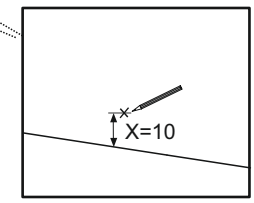

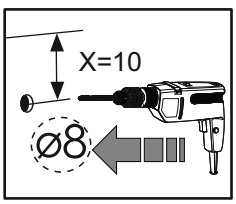

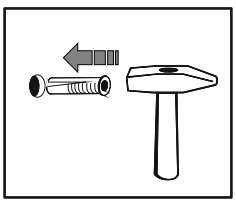

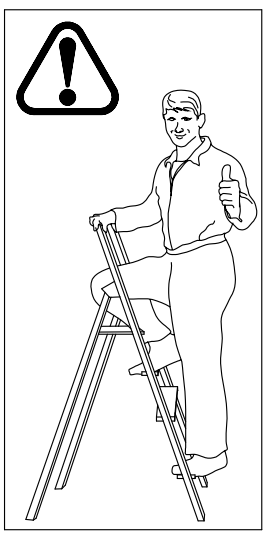

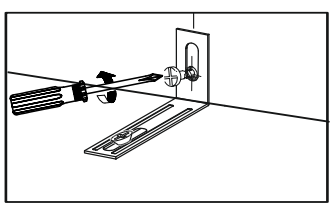

20

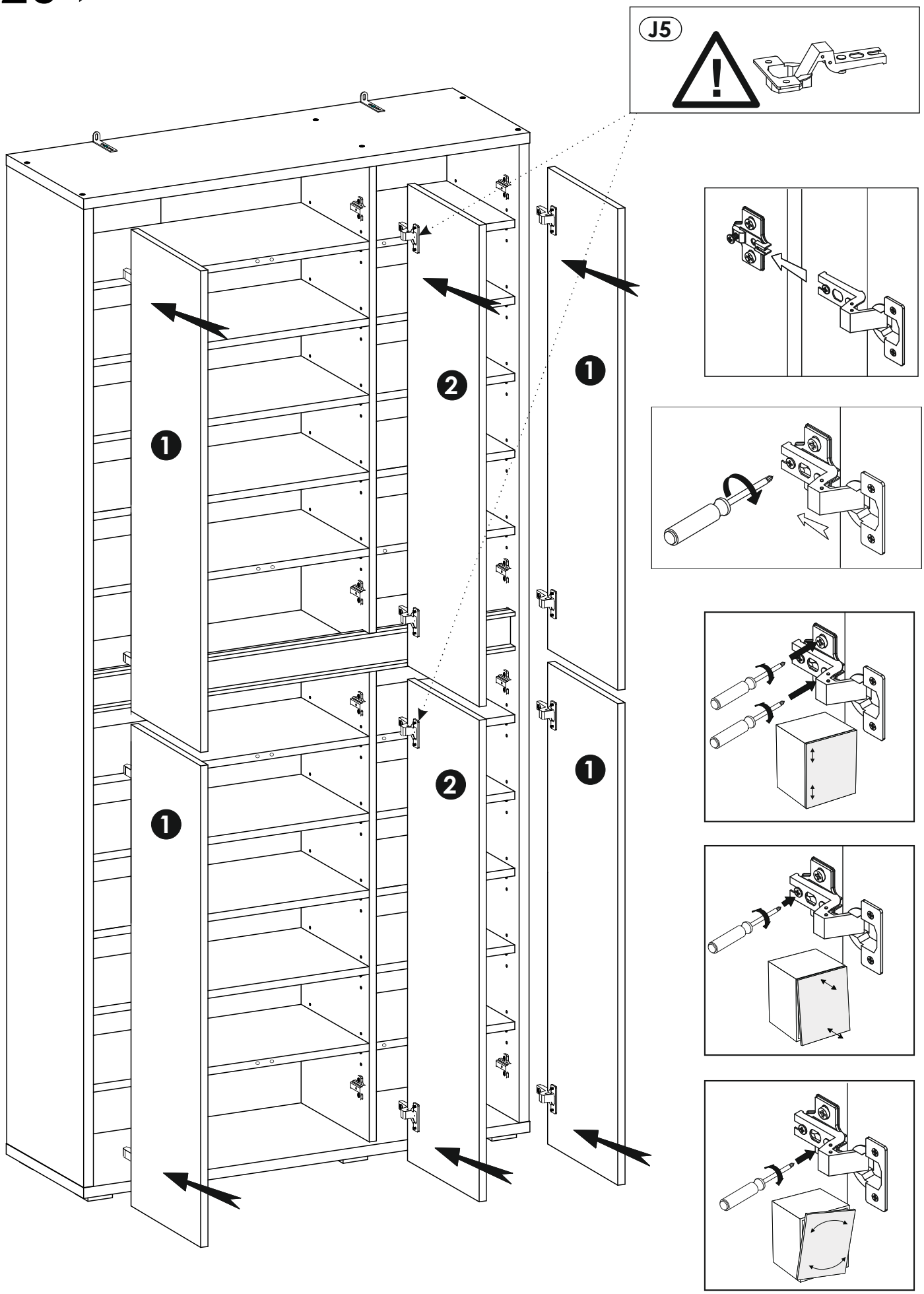

21

C0	x4	LOGO...	x1



